N457 FT OF SE1/4 OF SW1/4
EX 344.45
IN OR 1248/1251

ULSCH PHILLIP M & JOELLIS
8416 FORD ROAD
BRYCEVILLE, FL 32009

2025

04-1S-24-0000-0007-0080

NASSAU COUNTY PROPERTY

BUILDING CHARACTERISTICS

ELEMENT	CD	CONSTRUCTION
Exterior Wall	20	FACE BRICK 100
Roof Structur	03	GABLE/HIP 100
Roof Cover	03	COMP SHNGL 100
Interior Wall	05	DRYWALL 100
Interior Floo	14	CARPET 80
Interior Floo	08	SHT VINYL 20
Air Condition	03	CENTRAL 100
Heating Type	04	AIR DUCTED 100
Bedrooms		3 100
Bathrooms		3 100
Frame	02	WOOD FRAME 100
Stories	1.	1. 100
Units		0 100
BUD8 Adjustme	06	DIST 1D 100
Occupancy	00	NONE 100
Quality	06	Quality Level 06
DOR CODE	0100	SINGLE FAMILY
MAP NUM		MKT AREA 08
NEIGHBORHOOD/LOC	8001.00	

AREA TYPE	TOTAL GROSS AREA	PCT OF BASE	YEAR	TOT ADJ AREA	SUBAREA MARKET VALUE
BAS	3,004	100	1993	3,004	241,347
FEP	90	80	2003	72	5,784
FEP	156	80	2003	125	10,043
FGR	600	55	1993	330	26,513
FOP	194	30	1993	58	4,660
STP	80	10	1993	8	643
TOTALS	4,124			3,597	288,990

MARKET ADJUSTMENTS

TYPE	MDL	EFF. AREA	TOT ADJ PTS	EFF. BASE RATE	REPL. COST NEW	AYB	EYB	ECON	FNCT		NORM	% COND
0100	01	3,597	110.7450	110.74	398,332	1985	1985	0	0	0	27.45	72.55

1 SINGLE FAM – 100% - 2005 Heated Area: 3004 HX Base Yr 2005

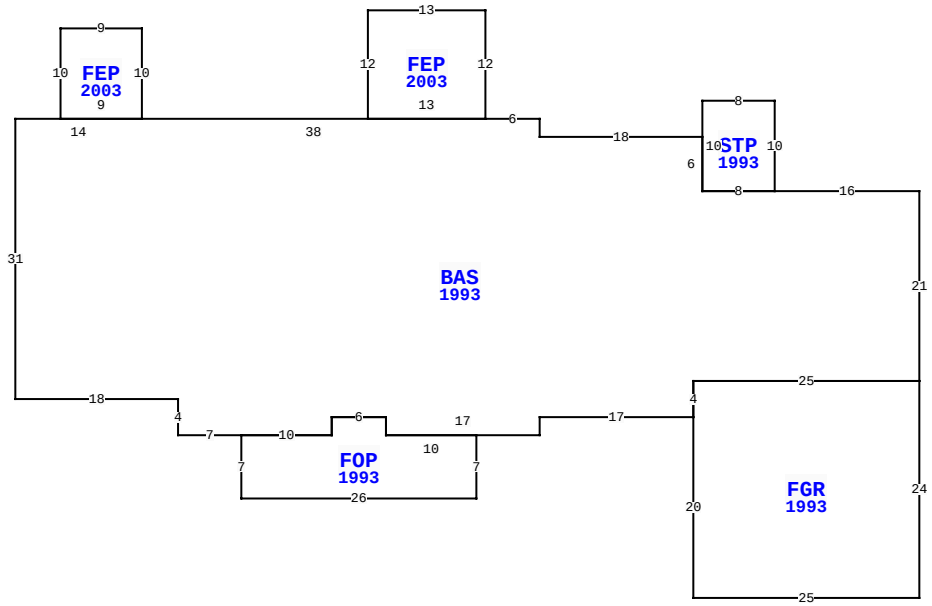

8416 FORD RD, BRYCEVILLE

BLD DATE		LGL DATE	
XF DATE		LAND DATE	05/21/2025 MLU
INC DATE		AG DATE	

VALUATION SUMMARY

VALUATION BY		STANDARD
Tax Group: 6	Tax Dist:	
BUILDING MARKET VALUE		422,532
TOTAL MARKET OB/XF VALUE		32,808
TOTAL LAND VALUE - MARKET		200,265
TOTAL MARKET VALUE		655,605
SOH/AGL Deduction		280,392
ASSESSED VALUE		375,213
TOTAL EXEMPTION VALUE	HX HB	50,722
BASE TAXABLE VALUE		324,491
TOTAL JUST VALUE		655,605
NCON VALUE		0
INCOME VALUE		
PREVIOUS YEAR MKT VALUE		603,394

PERMIT NUM	DESCRIPTION	AMT	ISSUED
B951849	SWIM POOL	13,000	04/01/1995
5129	NEW CONSTR	28,916	08/30/1988
3183	NEW CONSTR	1,800	08/30/1988
2703	H/AC	2,000	08/30/1988
5325	NEW CONSTR	1,700	08/30/1988

SALES DATA

OFF RECORD Number	DATE	TYPE INST	Q U	V I	RSN CD	SALE PRICE
1248/1251	7/27/2004	WD	Q	I		337,000
GRANTOR: GREENE KENNETH LEE &						
GRANTEE: ULSCH PHILLIP M & J						
0705/1050	5/26/1994	WD	Q	I		180,000
GRANTOR: EASON RONNIE & MARGAR						
GRANTEE: GREENE KENNETH & DA						

BUILDING NOTES

BUILDING DIMENSIONS

BAS=[YR=1993] W16 STP=[YR=1993] N10 W8 S10 E8 $ W8 N6 W18 N2 W6 FEP=[YR=2003] N12 W13 S12 E13 $ W38 FEP=[YR=2003] N10 W9 S10 E9 $ W14 S31 E18 S4 E7 FOP=[YR=1993] S7 E26 N7 W10 N2 W6 S2 W10 $ E10 N2 E6 S2 E17 N2 E17 FGR=[YR=1993] S20 E25 N24 W25 S4 $ N4 E25 N21 $.

EXTRA FEATURES

LN	OB/XF CODE	DESCRIPTION	BLD	CAP	L	W	UNITS	UT	Adj R	ADJ UNIT PRICE	ORIG COND	YEAR ON	YEAR ACTUAL	Q	% COND	OB/XF MKT VALUE	NOTES
1	0500	FP-PRE FAB	0	100	0	0	1.00	UT	3,500.00	3,500.00	100	1985	1985	3	56	1,960	
2	0812	CONCRETE C	0	100	0	0	1,150.00	SF	4.00	4.00	100	1986	1986	3	47	2,162	
3	0861	POOL GUNIT	0	100	0	0	480.00	SF	85.00	85.00	100	1995	1995	3	20	8,160	
4	0845	KOOL DECK	0	100	0	0	1,056.00	SF	7.25	7.25	100	1995	1995	3	68	5,206	
5	0877	JACUZZI	0	100	0	0	1.00	UT	1,000.00	1,000.00	100	1995	1995	3	20	200	
6	0530	STBL WD	0	100	0	0	1,400.00	SF	30.00	30.00	100	2005	2005	3	36	15,120	

LAND DESCRIPTION

TOTAL OB/XF 32,808

LN	USE CODE	CLS	LAND USE DESCRIPTION	CAP	RD	LOC ZONE	FRONT	DEPTH	TOT LND UTS	UNIT TYPE	DT	DPTH FACT	% COND	TOT ADJ	UNIT PRICE	ADJ UNIT PRICE	LAND VALUE	OTHER ADJUSTMENTS AND NOTES	YEAR	DENSITY	DECL	FRZ	YR	CONSRV
1	000100	C	RES	100	0006	OR	0.00	0.00	10.27	AC		1.00	1.00	1.00	19,500.00	19,500.00	200,265							

REVIEW DATE 01/06/2020 BY TWX Total Acres: 10.27 Total Land Value: 200,265 Market: 0 Agricultural: 0 Common: 200,265 PRINTED 07/30/2025 BY SYS

N457 FT OF SE1/4 OF SW1/4
EX 344.45
IN OR 1248/1251

ULSCH PHILLIP M & JOELLIS
8416 FORD ROAD
BRYCEVILLE, FL 32009

2025

04-1S-24-0000-0007-0080

BUILDING CHARACTERISTICS

ELEMENT	CD	CONSTRUCTION
Exterior Wall	05	AVERAGE 100
Roof Structur	03	GABLE/HIP 100
Roof Cover	01	MINIMUM 100
Interior Wall	05	DRYWALL 100
Interior Floo	08	SHT VINYL 100
Air Condition	03	CENTRAL 100
Heating Type	04	AIR DUCTED 100
Bedrooms		1 100
Bathrooms		1.5 100
Frame	02	WOOD FRAME 100
Stories	1.	1. 100
Units		0 100
Occupancy	00	NONE 100
Quality	01	Quality Level 01

DOR CODE	0100	SINGLE FAMILY	
MAP NUM		MKT AREA	08
NEIGHBORHOOD/LOC	8001.00		

AREA TYPE	TOTAL GROSS AREA	PCT OF BASE	YEAR	TOT ADJ AREA	SUBAREA MARKET VALUE
BAS	1,080	100	2019	1,080	87,835
UST	120	45	2019	54	4,392
UST	240	45	2019	108	8,783
UUS	800	50	2019	400	32,531
TOTALS	2,240			1,642	133,542

MARKET ADJUSTMENTS

TYPE	MDL	EFF. AREA	TOT ADJ PTS	EFF. BASE RATE	REPL. COST NEW	AYB	EYB	ECON	FNCT		NORM	% COND
0100	01	1,642	95.4000	95.40	156,647	1984	1994	0	0	0	14.75	85.25

2 SINGLE FAM – 0% - 2005 Heated Area: 1080 HX Base Yr 2005

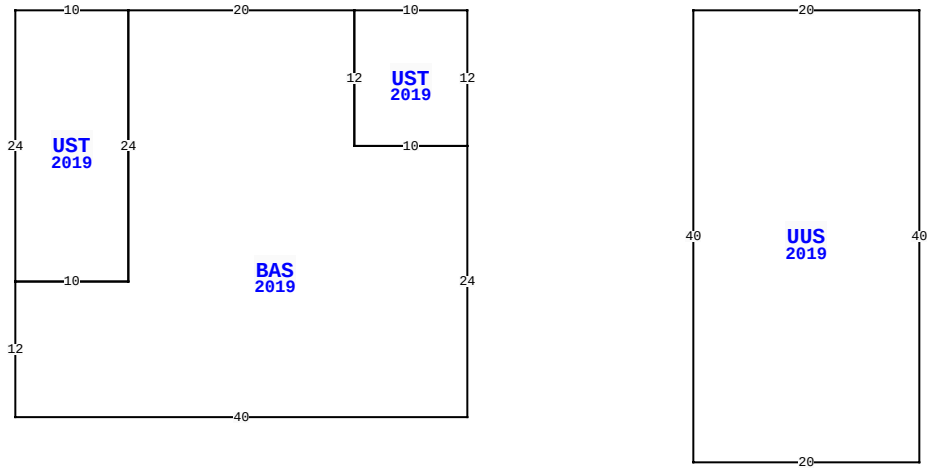

8416 FORD RD, BRYCEVILLE

BLD DATE		LGL DATE	
XF DATE		LAND DATE	05/21/2025 MLU
INC DATE		AG DATE	

NASSAU COUNTY PROPERTY

PAGE 2 of 2 6

VALUATION SUMMARY

VALUATION BY		STANDARD
Tax Group: 6	Tax Dist:	
BUILDING MARKET VALUE		422,532
TOTAL MARKET OB/XF VALUE		32,808
TOTAL LAND VALUE - MARKET		200,265
TOTAL MARKET VALUE		655,605
SOH/AGL Deduction		280,392
ASSESSED VALUE		375,213
TOTAL EXEMPTION VALUE	HX HB	50,722
BASE TAXABLE VALUE		324,491
TOTAL JUST VALUE		655,605
NCON VALUE		0
INCOME VALUE		
PREVIOUS YEAR MKT VALUE		603,394

PERMIT NUM	DESCRIPTION	AMT	ISSUED

SALES DATA

OFF RECORD Number	DATE	TYPE INST	Q / U	V / I	RSN CD	SALE PRICE
1248/1251	7/27/2004	WD	Q	I		337,000
GRANTOR: GREENE KENNETH LEE &						
GRANTEE: ULSCH PHILLIP M & J						
0705/1050	5/26/1994	WD	Q	I		180,000
GRANTOR: EASON RONNIE & MARGAR						
GRANTEE: GREENE KENNETH & DA						

BUILDING NOTES

BUILDING DIMENSIONS

UST=[YR=2019] W10 BAS=[YR=2019] W20 UST=[YR=2019] W10 S24 E10 N24$ S24 W10 S12 E40 N24 W10 N12$ S12 E10 N12$ PTR= E20 UUS=[YR=2019] E20 S40 W20 N40$ W20$.

EXTRA FEATURES

L N	OB/XF CODE	DESCRIPTION	BLD	CAP	L	W	UNITS	UT	Adj R	ADJ UNIT PRICE	ORIG COND	YEAR ON	YEAR ACTUAL	Q	% COND	OB/XF MKT VALUE	NOTES

LAND DESCRIPTION

TOTAL OB/XF 0

L N	USE CODE	CLS	LAND USE DESCRIPTION	CAP	R D	LOC ZONE	FRONT	DEPTH	TOT LND UTS	UNIT TYPE	D T	DPTH FACT	% COND	TOT ADJ	UNIT PRICE	ADJ UNIT PRICE	LAND VALUE	OTHER ADJUSTMENTS AND NOTES	YEAR	DENSITY	DECL	FRZ	YR	CONSRV

REVIEW DATE 01/06/2020 BY TWX Total Acres: 10.27 Total Land Value: 200,265 Market: 0 Agricultural: 0 Common: 200,265 PRINTED 07/30/2025 BY SYS