IN OR 340 PG 337

WILKES CHARLES R & KAY F
541250 US HWY 1
CALLAHAN, FL 32011-5615

2025

04-1N-25-0000-0001-0010

BUILDING CHARACTERISTICS

ELEMENT	CD	CONSTRUCTION
Exterior Wall	17	CB STUCCO 100
Roof Structur	03	GABLE/HIP 100
Roof Cover	12	MODULAR MT 100
Interior Wall	05	DRYWALL 100
Interior Floo	14	CARPET 100
Air Condition	03	CENTRAL 100
Heating Type	04	AIR DUCTED 100
Bedrooms		4 100
Bathrooms		3 100
Frame	02	WOOD FRAME 100
Stories	1.	1. 100
Units		0 100
BUD8 Adjustme	06	DIST 1D 100
Occupancy	00	NONE 100
Quality	01	Quality Level 01

DOR CODE 0100 SINGLE FAMILY

MAP NUM | MKT AREA 08

NEIGHBORHOOD/LOC 8001.00

AREA TYPE	TOTAL GROSS AREA	PCT OF BASE	YEAR	TOT ADJ AREA	SUBAREA MARKET VALUE
BAS	2,672	100	1993	2,672	247,559
FCP	800	25	1993	200	18,530
FGR	960	55	1993	528	48,919
FOP	48	30	1993	14	1,297
FOP	160	30	1993	48	4,447
FOP	240	30	1993	72	6,671
TOTALS	4,880			3,534	327,422

MARKET ADJUSTMENTS

TYPE	MDL	EFF. AREA	TOT ADJ PTS	EFF. BASE RATE	REPL. COST NEW	AYB	EYB	ECON	FNCT		NORM	% COND
0900	01	3,534	88.2900	116.54	411,852	1978	1983	0	0	0	20.50	79.50

1 SNGL FAM – 100% - 2016 Heated Area: 2672 HX Base Yr 1982

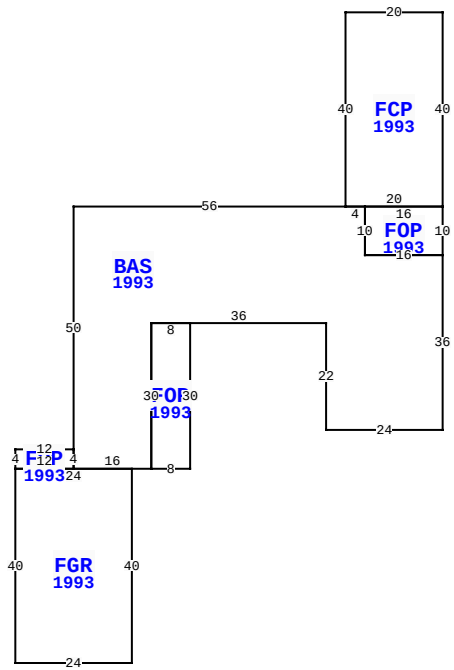

541250 US HWY 1, CALLAHAN

BLD DATE		LGL DATE	
XF DATE		LAND DATE	05/09/2025 MLU
INC DATE		AG DATE	

NASSAU COUNTY PROPERTY

PAGE 1 of 1 6

VALUATION SUMMARY

VALUATION BY		STANDARD
Tax Group: 6	Tax Dist:	
BUILDING MARKET VALUE		327,422
TOTAL MARKET OB/XF VALUE		34,755
TOTAL LAND VALUE - MARKET		70,000
TOTAL MARKET VALUE		432,177
SOH/AGL Deduction		277,116
ASSESSED VALUE		155,061
TOTAL EXEMPTION VALUE	HX HB VX	55,722
BASE TAXABLE VALUE		99,339
TOTAL JUST VALUE		432,177
NCON VALUE		0
INCOME VALUE		
PREVIOUS YEAR MKT VALUE		426,933

PERMIT NUM	DESCRIPTION	AMT	ISSUED
E006734	NEW CONSTR	400	03/01/2000
B996683	GARAGE	20,000	12/01/1999

SALES DATA

OFF RECORD Number	DATE	TYPE INST	Q U	V I	RSN CD	SALE PRICE
0340/0337	7/01/1981	WD	Q	I		75,500
GRANTOR:						
GRANTEE:						
0257/0367	1/01/1978	WD	U	V		12,000
GRANTOR:						
GRANTEE:						

BUILDING NOTES

BUILDING DIMENSIONS

FCP=[YR=1993] W20 S40 BAS=[YR=1993] W56 S50 FOP=[YR=1993]
W12 S4 FGR=[YR=1993] S40 E24 N40 W24 $ E12 N4 $ S4 E16
FOP=[YR=1993] E8 N30 W8 S30 $ N30 E36 S22 E24 N36
FOP=[YR=1993] N10 W16 S10 E16 $ W16 N10 W4 $ E20 N40 $.

EXTRA FEATURES

LN	OB/XF CODE	DESCRIPTION	BLD	CAP	L	W	UNITS	UT	Adj R	ADJ UNIT PRICE	ORIG COND	YEAR ON	YEAR ACTUAL	Q	% COND	OB/XF MKT VALUE	NOTES
3	0940	SHEDS/PORT	0	100	20	10	200.00	SF	30.00	30.00	100	1992	1992	3	20	1,200	
4	0940	SHEDS/PORT	0	100	20	9	180.00	SF	19.50	19.50	100	1997	1997	3	20	702	
5	1126	CB/STC 8"	0	100	37	8	296.00	SF	8.00	8.00	100	1978	1978	3	28	663	
6	0510	GARAGE WD-	0	100	40	20	800.00	SF	35.00	35.00	100	2000	2000	3	27	7,560	
7	0812	CONCRETE C	0	100	0	0	7,486.00	SF	4.00	4.00	100	2002	2002	3	80	23,955	
8	0680	POLE SHED	0	100	15	15	225.00	SF	10.00	10.00	100	2003	2003	3	30	675	

LAND DESCRIPTION

TOTAL OB/XF 34,755

LN	USE CODE	CLS	LAND USE DESCRIPTION	CAP	RD	LOC ZONE	FRONT	DEPTH	TOT LND UTS	UNIT TYPE	DT	DPTH FACT	% COND	TOT ADJ	UNIT PRICE	ADJ UNIT PRICE	LAND VALUE	OTHER ADJUSTMENTS AND NOTES	YEAR	DENSITY	DECL	FRZ	YR	CONSRV
1	000100	C	RES	100		OR	0.00	0.00	2.00	AC		1.00	1.00	1.00	35,000.00	35,000.00	70,000							

REVIEW DATE 04/17/2020 BY KBA Total Acres: 2.00 Total Land Value: 70,000 Market: 0 Agricultural: 0 Common: 70,000 PRINTED 07/30/2025 BY SYS