IN OR 2577/1193
PARCELS 1-4 & 3-7
ESMT OR 1403/1608

GRIFFIS BUDDY JR & GLENDA L/E/
17918 HOOT OWL HOLLOW
HILLIARD, FL 32046

2025

04-1N-23-0000-0001-0040

BUILDING CHARACTERISTICS

ELEMENT	CD	CONSTRUCTION
Exterior Wall	05	AVERAGE 100
Roof Structur	03	GABLE/HIP 100
Roof Cover	03	COMP SHNGL 100
Interior Wall	05	DRYWALL 100
Interior Floo	14	CARPET 80
Interior Floo	11	CLAY TILE 20
Air Condition	03	CENTRAL 100
Heating Type	04	AIR DUCTED 100
Bedrooms		3 100
Bathrooms		2 100
Frame	02	WOOD FRAME 100
Stories	1.	1. 100
Units		0 100
Occupancy	00	NONE 100
Quality	01	Quality Level 01
DOR CODE	0100	SINGLE FAMILY
MAP NUM		MKT AREA 09
NEIGHBORHOOD/LOC	9001.00	

AREA TYPE	TOTAL GROSS AREA	PCT OF BASE	YEAR	TOT ADJ AREA	SUBAREA MARKET VALUE
BAS	1,714	100	2000	1,714	196,672
FEP	240	80	2010	192	22,030
FOP	200	30	2000	60	6,884
FOP	376	30	2000	113	12,966
UOP	40	20	2010	8	918
TOTALS	2,570			2,087	239,471

MARKET ADJUSTMENTS

TYPE	MDL	EFF. AREA	TOT ADJ PTS	EFF. BASE RATE	REPL. COST NEW	AYB	EYB	ECON	FNCT		NORM	% COND
0900	01	2,087	95.7852	126.44	263,880	2000	2005	0	0	0	9.25	90.75

1 SNGL FAM – 100% - 2001 Heated Area: 1714 HX Base Yr 2001

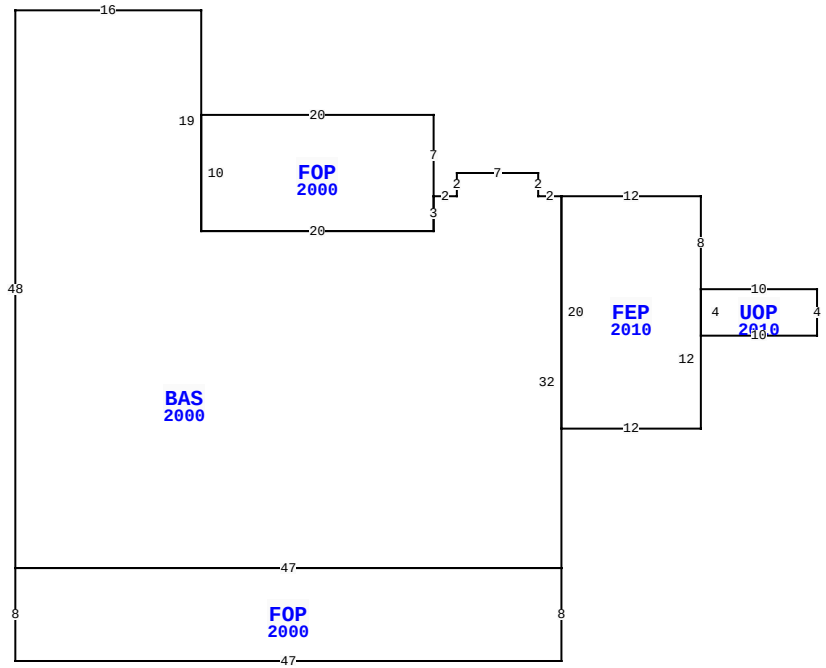

17918 HOOT OWL HOLW, HILLIARD

BLD DATE		LGL DATE	
XF DATE		LAND DATE	05/09/2025 MLU
INC DATE		AG DATE	

NASSAU COUNTY PROPERTY

PAGE 1 of 2 6

VALUATION SUMMARY

VALUATION BY		STANDARD
Tax Group: 6	Tax Dist:	
BUILDING MARKET VALUE		260,797
TOTAL MARKET OB/XF VALUE		16,224
TOTAL LAND VALUE - MARKET		110,175
TOTAL MARKET VALUE		387,196
SOH/AGL Deduction		191,941
ASSESSED VALUE		195,255
TOTAL EXEMPTION VALUE	HX HB	50,722
BASE TAXABLE VALUE		144,533
TOTAL JUST VALUE		387,196
NCON VALUE		0
INCOME VALUE		
PREVIOUS YEAR MKT VALUE		373,191

PERMIT NUM	DESCRIPTION	AMT	ISSUED
21009043	REPAIR/RRF	16,250	07/12/2021
21002558	GARAGE	50,741	03/03/2021
B006811	NEW CONSTR	90,000	03/01/2000
B996470	GARAGE	10,000	10/01/1999

SALES DATA

OFF RECORD Number	DATE	TYPE INST	Q / U	V / I	RSN CD	SALE PRICE
2577/1193	7/14/2022	WD	U	I	11	100
GRANTOR: GRIFFIS BUDDY R JR &						
GRANTEE: GRIFFIS BRUCE R & T						
0892/1433	7/26/1999	WD	Q	V		31,000
GRANTOR: STEFANIK ALAN & KIMBE						
GRANTEE: GRIFFIS BUDDY JR &						

BUILDING NOTES

BUILDING DIMENSIONS

UOP=[YR=2010] W10 FEP=[YR=2010] N8 W12 BAS=[YR=2000] W2 N2 W7 S2 W2 FOP=[YR=2000] N7 W20 S10 E20 N3 $ S3 W20 N19 W16 S48 FOP=[YR=2000] S8 E47 N8 W47 $ E47 N32 $ S20 E12 N12 $ S4 E10 N4 $.

EXTRA FEATURES

LN	OB/XF CODE	DESCRIPTION	BLD	CAP	L	W	UNITS	UT	Adj R	ADJ UNIT PRICE	ORIG COND	YEAR ON	YEAR ACTUAL	Q	% COND	OB/XF MKT VALUE	NOTES
1	0510	GARAGE WD-	0	100	32	32	1,024.00	SF	35.00	35.00	100	1999	1999	3	26	9,318	
2	0500	FP-PRE FAB	0	100	0	0	1.00	UT	3,500.00	3,500.00	100	2000	2000	3	83	2,905	
3	0811	CONCRETE B	0	100	0	0	504.00	SF	5.20	5.20	100	2001	2001	3	79	2,070	
4	0350	CARPORT WD	0	100	30	30	900.00	SF	9.75	9.75	100	2005	2005	3	22	1,931	

LAND DESCRIPTION

TOTAL OB/XF 16,224

LN	USE CODE	CLS	LAND USE DESCRIPTION	CAP	RD	LOC ZONE	FRONT	DEPTH	TOT LND UTS	UNIT TYPE	DT	DPTH FACT	% COND	TOT ADJ	UNIT PRICE	ADJ UNIT PRICE	LAND VALUE	OTHER ADJUSTMENTS AND NOTES	YEAR	DENSITY	DECL	FRZ	YR	CONSRV
1	000100	C	RES	100	0007	OR	0.00	0.00	5.65	AC		1.00	1.00	1.00	19,500.00	19,500.00	110,175							

REVIEW DATE 08/12/2021 BY TW Total Acres: 5.65 Total Land Value: 110,175 Market: 0 Agricultural: 0 Common: 110,175 PRINTED 07/30/2025 BY SYS

IN OR 2577/1193
PARCELS 1-4 & 3-7
ESMT OR 1403/1608

GRIFFIS BUDDY JR & GLENDA L/E/
17918 HOOT OWL HOLLOW
HILLIARD, FL 32046

2025

04-1N-23-0000-0001-0040

NASSAU COUNTY PROPERTY

BUILDING CHARACTERISTICS

ELEMENT	CD	CONSTRUCTION
Exterior Wall	25	MOD METAL 100
Roof Structur	03	GABLE/HIP 100
Roof Cover	12	MODULAR MT 100
Interior Wall		N/A 100
Interior Floo	03	CONC FINSH 100
Air Condition	99	N/A 100
Heating Type		N/A 100
Bedrooms		0 100
Bathrooms		0 100
Frame	05	STEEL 100
Stories	0	0 100
Units		0 100
Occupancy	00	NONE 100
Quality	06	Quality Level 06

DOR CODE 0100 SINGLE FAMILY
MAP NUM | MKT AREA 09
NEIGHBORHOOD/LOC 9001.00

AREA TYPE	TOTAL GROSS AREA	PCT OF BASE	YEAR	TOT ADJ AREA	SUBAREA MARKET VALUE
BAS	1,040	100	2021	1,040	21,326
TOTALS	1,040			1,040	21,326

MARKET ADJUSTMENTS

TYPE	MDL	EFF. AREA	TOT ADJ PTS	EFF. BASE RATE	REPL. COST NEW	AYB	EYB	ECON	FNCT		NORM	% COND
6500	01	1,040	57.1320	21.14	21,986	2021	2021	0	0	0	3.00	97.00

2 GARAGE RES – 100% - 2001 Heated Area: 1040 HX Base Yr 2001

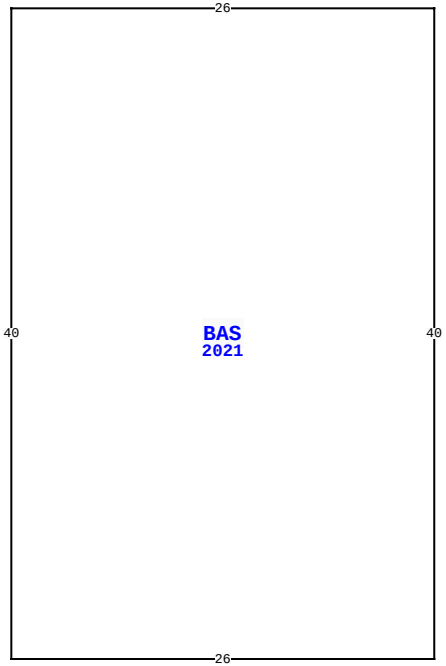

17918 HOOT OWL HOLW, HILLIARD

BLD DATE		LGL DATE	
XF DATE		LAND DATE	05/09/2025 MLU
INC DATE		AG DATE	

VALUATION SUMMARY

VALUATION BY		STANDARD
Tax Group: 6	Tax Dist:	
BUILDING MARKET VALUE		260,797
TOTAL MARKET OB/XF VALUE		16,224
TOTAL LAND VALUE - MARKET		110,175
TOTAL MARKET VALUE		387,196
SOH/AGL Deduction		191,941
ASSESSED VALUE		195,255
TOTAL EXEMPTION VALUE	HX HB	50,722
BASE TAXABLE VALUE		144,533
TOTAL JUST VALUE		387,196
NCON VALUE		0
INCOME VALUE		
PREVIOUS YEAR MKT VALUE		373,191

PERMIT NUM	DESCRIPTION	AMT	ISSUED

SALES DATA

OFF RECORD Number	DATE	TYPE INST	Q / U	V / I	RSN CD	SALE PRICE
2577/1193	7/14/2022	WD	U	I	11	100
GRANTOR: GRIFFIS BUDDY R JR &						
GRANTEE: GRIFFIS BRUCE R & T						
0892/1433	7/26/1999	WD	Q	V		31,000
GRANTOR: STEFANIK ALAN & KIMBE						
GRANTEE: GRIFFIS BUDDY JR &						

BUILDING NOTES

BUILDING DIMENSIONS

BAS=[YR=2021] W26 S40 E26 N40$.

EXTRA FEATURES

L N	OB/XF CODE	DESCRIPTION	BLD	CAP	L	W	UNITS	UT	Adj R	ADJ UNIT PRICE	ORIG COND	YEAR ON	YEAR ACTUAL	Q	% COND	OB/XF MKT VALUE	NOTES

LAND DESCRIPTION

TOTAL OB/XF 0

L N	USE CODE	CLS	LAND USE DESCRIPTION	CAP	R D	LOC ZONE	FRONT	DEPTH	TOT LND UTS	UNIT TYPE	D T	DPTH FACT	% COND	TOT ADJ	UNIT PRICE	ADJ UNIT PRICE	LAND VALUE	OTHER ADJUSTMENTS AND NOTES	YEAR	DENSITY	DECL	FRZ	YR	CONSRV

REVIEW DATE 08/12/2021 BY TW Total Acres: 5.65 Total Land Value: 110,175 Market: 0 Agricultural: 0 Common: 110,175 PRINTED 07/30/2025 BY SYS