LOT 4
ESMT PT OR 1773/1210
SOUND POINT @ LONG POINT #2

KALKREUTH JOHN L & SHERRI L
8 SOUND POINT PL
FERNANDINA BEACH, FL 32034

2025

03-6N-29-0SP2-0004-0000

BUILDING CHARACTERISTICS

ELEMENT	CD	CONSTRUCTION
Exterior Wall	16	WD FR STUC 100
Roof Structur	08	IRREGULAR 100
Roof Cover	03	COMP SHNGL 100
Interior Wall	05	DRYWALL 100
Interior Floo	12	HARDWOOD 70
Interior Floo	19	MARBLE 30
Air Condition	03	CENTRAL 100
Heating Type	04	AIR DUCTED 100
Bedrooms		4 100
Bathrooms		5.5 100
Frame	02	WOOD FRAME 100
Stories	2.	2. 100
Units		0 100
Quality	02	Quality Level 02
DOR CODE	0100	SINGLE FAMILY
MAP NUM		MKT AREA 10
NEIGHBORHOOD/LOC	10007.00	

AREA TYPE	TOTAL GROSS AREA	PCT OF BASE	YEAR	TOT ADJ AREA	SUBAREA MARKET VALUE
BAS	2,872	100	1994	2,872	1,433,863
FEP	165	80	2010	132	65,902
FEP	264	80	2010	211	105,343
FGR	624	55	1994	343	171,244
FOP	35	30	1994	10	4,993
FOP	235	30	1994	70	34,948
FUS	1,769	100	1994	1,769	883,184
PTO	168	5	1994	8	3,994
UOP	55	20	1994	11	5,492
UOP	85	20	1994	17	8,487
TOTALS	7,667			5,722	2,856,743

MARKET ADJUSTMENTS

TYPE	MDL	EFF. AREA	TOT ADJ PTS	EFF. BASE RATE	REPL. COST NEW	AYB	EYB	ECON	FNCT		NORM	% COND
0500	22	5,722	371.7452	587.36	3,360,874	1994	1994	0	0	0	15.00	85.00

1 SFR CUST - 100% - 2024 Heated Area: 4641 HX Base Yr 2024

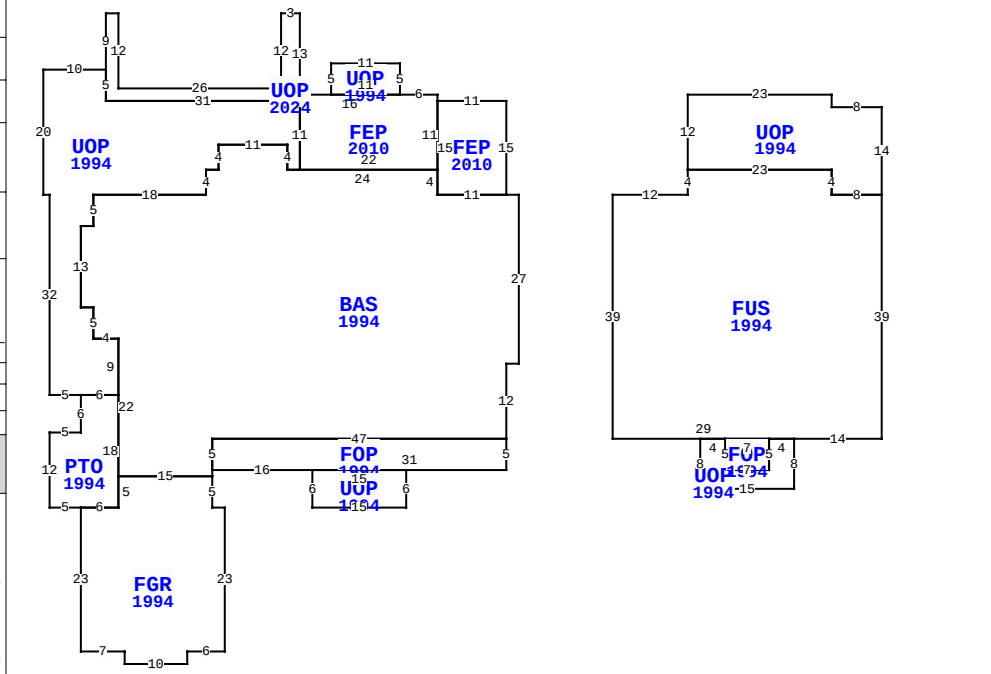

** This building has 14 Sub-Areas

8 SOUND POINT PL, FERNANDINA BEACH

BLD DATE		LGL DATE	
XF DATE		LAND DATE	04/08/2024 MLU
INC DATE		AG DATE	

NASSAU COUNTY PROPERTY

PAGE 1 of 2 5

VALUATION SUMMARY

VALUATION BY		STANDARD
Tax Group: 5	Tax Dist:	
BUILDING MARKET VALUE		2,856,743
TOTAL MARKET OB/XF VALUE		95,389
TOTAL LAND VALUE - MARKET		1,610,000
TOTAL MARKET VALUE		4,562,132
SOH/AGL Deduction		1,381,852
ASSESSED VALUE		3,180,280
TOTAL EXEMPTION VALUE	HX HB	50,722
BASE TAXABLE VALUE		3,129,558
TOTAL JUST VALUE		4,562,132
NCON VALUE		0
INCOME VALUE		
PREVIOUS YEAR MKT VALUE		3,090,651

PERMIT NUM	DESCRIPTION	AMT	ISSUED
230005999	GLASS WALL=LANAI	52,550	05/09/2023
22018510	SWIM POOL	70,000	12/16/2022
B928553	NEW CONSTR	651,020	12/10/1992

SALES DATA

OFF RECORD Number	DATE	TYPE INST	Q / U	V / I	RSN CD	SALE PRICE
2485/0701	8/04/2021	WD	Q	I	02	3,215,000
GRANTOR: SELTON ROBERT W III &						
GRANTEE: KALKREUTH JOHN L &						
1312/0227	4/25/2005	WD	Q	I		2,150,000
GRANTOR: HAMPTON MARJORIE B TR						
GRANTEE: SELTON ROBERT W III						

BUILDING NOTES

EXTRA FEATURES

LN	OB/XF CODE	DESCRIPTION	BLD	CAP	L	W	UNITS	UT	Adj R	ADJ UNIT PRICE	ORIG COND	YEAR ON	YEAR ACTUAL	Q	% COND	OB/XF MKT VALUE	NOTES
1	0504	FP-ELECTRI	0	100	0	0	1.00	UT	2,000.00	2,000.00	100	1994	1994	3	74	1,480	
2	0858	SCULP CONC	0	100	0	0	3,948.00	SF	13.00	13.00	100	1994	1994	3	89	45,678	
3	0300	BOAT DCK W	0	100	438	5	2,190.00	SF	40.00	40.00	100	1994	1994	3	20	17,520	
4	1126	CB/STC 8"	0	100	6	8	48.00	SF	8.00	8.00	100	1994	1994	3	66	253	
5	0446	BOX FNC 6'	0	100	0	0	12.00	LF	20.00	20.00	100	1994	1994	3	20	48	
6	0820	WOOD WALK	0	100	0	0	184.00	SF	11.75	11.75	100	1994	1994	3	40	865	
7	0300	BOAT DCK W	0	100	20	11	220.00	SF	40.00	40.00	100	1994	1994	3	20	1,760	
8	0303	FLT DOCK W	0	100	12	4	48.00	SF	26.00	26.00	100	2005	2005	3	36	449	
9	0317	DCK PLNG W	0	100	0	0	5.00	UT	1,000.00	1,000.00	100	2005	2005	3	22	1,100	
10	0311	WD GANG WY	0	100	0	0	20.00	SF	45.00	45.00	100	2005	2005	3	22	198	

TOTAL OB/XF 69,351

BUILDING DIMENSIONS

BAS=[YR=1994;ORIG=0,0] W2 W11 N4 W24 N4 W11 S4 W2 S4 W18 S5 W2 S13 E2 S5 E4 S22 E15 N1 N5 E47 N12 E2 N27 $
FUS=[YR=1994;ORIG=15,0] E12 N4 E23 S4 E8 S39 W14 W29 N39 $
UOP=[YR=1994;ORIG=-35,-15] W31 N5 W10 S20 E1 S32 E5 E6 N9 W4 N5 W2 N13 E2 N5 E18 N4 E2 N4 E11 S4 E2 N11 $
FGR=[YR=1994;ORIG=-70,50] S23 E7 S2 E10 N2 E6 N23 W2 N5 W15 S5 W6 $
UOP=[YR=1994;ORIG=27,-4] N12 E23 S2 E8 S14 W8 N4 W23 $
FEP=[YR=2010;ORIG=-13,-15] N1 W6 W16 S1 S11 E22 N11 $
FOP=[YR=1994;ORIG=-49,44] E16 E31 N5 W47 S5 $
PTO=[YR=1994;ORIG=-70,32] S6 W5 S12 E5 E6 N18 W6 $
FEP=[YR=2010;ORIG=-2,0] N15 W11 S15 E11 $

LAND DESCRIPTION

LN	USE CODE	CLS	LAND USE DESCRIPTION	CAP	RD	LOC ZONE	FRONT	DEPTH	TOT LND UTS	UNIT TYPE	DT	DPTH FACT	% COND	TOT ADJ	UNIT PRICE	ADJ UNIT PRICE	LAND VALUE	OTHER ADJUSTMENTS AND NOTES	YEAR	DENSITY	DECL	FRZ	YR	CONSRV
1	000132	C	RES RIVER	100		PUD	0.00	0.00	1.00	LT		1.00	1.00	1.15	1,400,000.00	1,610,000.00	1,610,000							

REVIEW DATE 02/28/2024 BY TW Total Acres: 0.00 Total Land Value: 1,610,000 Market: 0 Agricultural: 0 Common: 1,610,000 PRINTED 07/30/2025 BY SYS

LOT 4
ESMT PT OR 1773/1210
SOUND POINT @ LONG POINT #2

KALKREUTH JOHN L & SHERRI L
8 SOUND POINT PL
FERNANDINA BEACH, FL 32034

2025

03-6N-29-0SP2-0004-0000

NASSAU COUNTY PROPERTY

BUILDING CHARACTERISTICS

ELEMENT	CD	CONSTRUCTION

DOR CODE	0100	SINGLE FAMILY	
MAP NUM		MKT AREA	10
NEIGHBORHOOD/LOC	10007.00		

AREA TYPE	TOTAL GROSS AREA	PCT OF BASE	YEAR	TOT ADJ AREA	SUBAREA MARKET VALUE
TOTALS					

MARKET ADJUSTMENTS

TYPE	MDL	EFF. AREA	TOT ADJ PTS	EFF. BASE RATE	REPL. COST NEW	AYB	EYB	ECON	FNCT		NORM	% COND

VALUATION SUMMARY

VALUATION BY		STANDARD
Tax Group: 5	Tax Dist:	
BUILDING MARKET VALUE		2,856,743
TOTAL MARKET OB/XF VALUE		95,389
TOTAL LAND VALUE - MARKET		1,610,000
TOTAL MARKET VALUE		4,562,132
SOH/AGL Deduction		1,381,852
ASSESSED VALUE		3,180,280
TOTAL EXEMPTION VALUE	HX HB	50,722
BASE TAXABLE VALUE		3,129,558
TOTAL JUST VALUE		4,562,132
NCON VALUE		0
INCOME VALUE		
PREVIOUS YEAR MKT VALUE		3,090,651

PERMIT NUM	DESCRIPTION	AMT	ISSUED

SALES DATA

OFF RECORD Number	DATE	TYPE INST	Q / U	V / I	RSN CD	SALE PRICE
2485/0701	8/04/2021	WD	Q	I	02	3,215,000
GRANTOR: SELTON ROBERT W III &						
GRANTEE: KALKREUTH JOHN L &						
1312/0227	4/25/2005	WD	Q	I		2,150,000
GRANTOR: HAMPTON MARJORIE B TR						
GRANTEE: SELTON ROBERT W III						

BLD DATE		LGL DATE	
XF DATE		LAND DATE	04/08/2024 MLU
INC DATE		AG DATE	

BUILDING NOTES

BUILDING DIMENSIONS

EXTRA FEATURES

LN	OB/XF CODE	DESCRIPTION	BLD	CAP	L	W	UNITS	UT	Adj R	ADJ UNIT PRICE	ORIG COND	YEAR ON	YEAR ACTUAL	Q	% COND	OB/XF MKT VALUE	NOTES
11	0323	BOAT LFT H	0	100	0	0	1.00	UT	2,500.00	2,500.00	100	2005	2005	3	22	550	
12	0303	FLT DOCK W	0	100	20	8	160.00	SF	26.00	26.00	100	2005	2005	3	36	1,498	
13	0861	POOL GUNIT	0	100	24	12	288.00	SF	85.00	85.00	100	2024	2023		98	23,990	

LAND DESCRIPTION

TOTAL OB/XF 26,038

LN	USE CODE	CLS	LAND USE DESCRIPTION	CAP	RD	LOC ZONE	FRONT	DEPTH	TOT LND UTS	UNIT TYPE	DT	DPTH FACT	% COND	TOT ADJ	UNIT PRICE	ADJ UNIT PRICE	LAND VALUE	OTHER ADJUSTMENTS AND NOTES	YEAR	DENSITY	DECL	FRZ	YR	CONSRV

REVIEW DATE 02/28/2024 BY TW Total Acres: 0.00 Total Land Value: 1,610,000 Market: 0 Agricultural: 0 Common: 1,610,000 PRINTED 07/30/2025 BY SYS