LOT 84
IN OR 727 PG 1483
LONG POINT #1 PB 5/85-89

SMITH JOYCE MARTIN REV TRUST
8 MARSH POINT RD
FERNANDINA BEACH, FL 32034

2025

03-6N-29-00LP-0084-0000

BUILDING CHARACTERISTICS

ELEMENT	CD	CONSTRUCTION
Exterior Wall	16	WD FR STUC 80
Exterior Wall	20	FACE BRICK 20
Roof Structur	03	GABLE/HIP 100
Roof Cover	03	COMP SHNGL 100
Interior Wall	05	DRYWALL 100
Interior Floo	09	PINE WOOD 50
Interior Floo	14	CARPET 50
Air Condition	03	CENTRAL 100
Heating Type	04	AIR DUCTED 100
Bedrooms		4 100
Bathrooms		6 100
Frame	02	WOOD FRAME 100
Stories	2.	2. 100
Units		0 100
Quality	04	Quality Level 04
DOR CODE	0100	SINGLE FAMILY
MAP NUM		MKT AREA 10
NEIGHBORHOOD/LOC	10007.00	

AREA TYPE	TOTAL GROSS AREA	PCT OF BASE	YEAR	TOT ADJ AREA	SUBAREA MARKET VALUE
BAS	708	100	1993	708	124,913
BAS	2,979	100	1993	2,979	525,586
BAS	182	100	2008	182	32,110
FGR	1,270	55	1993	698	123,148
FOP	1,259	30	1993	378	66,691
FST	390	55	1993	214	37,756
FUS	2,779	100	1993	2,779	490,300
STP	16	10	1993	2	353
STP	180	10	1993	18	3,176
UOP	110	20	1993	22	3,882
TOTALS	10,653			8,149	1,437,733

MARKET ADJUSTMENTS

TYPE	MDL	EFF. AREA	TOT ADJ PTS	EFF. BASE RATE	REPL. COST NEW	AYB	EYB	ECON	FNCT		NORM	% COND
0500	11	8,149	137.9400	217.95	1,776,075	1989	1989	0	0	0	19.05	80.95

1 SFR CUST – 0% - 2025 Heated Area: 6648 HX Base Yr

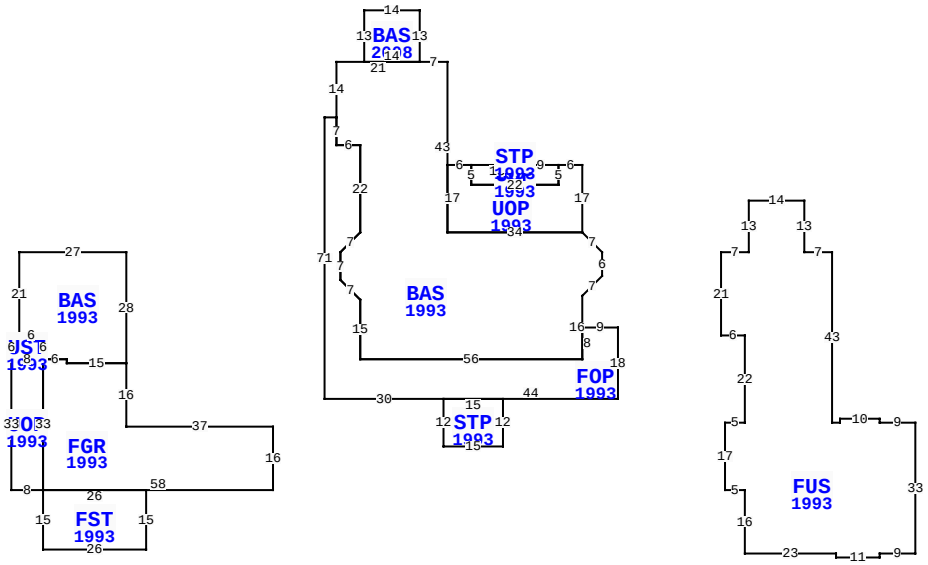

** This building has 13 Sub-Areas

8 MARSH POINT RD, FERNANDINA BEACH

BLD DATE		LGL DATE	
XF DATE		LAND DATE	04/08/2024 MLU
INC DATE		AG DATE	

EXTRA FEATURES

LN	OB/XF CODE	DESCRIPTION	BLD	CAP	L	W	UNITS	UT	Adj R	ADJ UNIT PRICE	ORIG COND	YEAR ON	YEAR ACTUAL	Q	% COND	OB/XF MKT VALUE	NOTES
1	0812	CONCRETE C	0	0	0	0	3,529.00	SF	4.00	4.00	100	1989	1989	3	54.5	7,693	
2	0825	BRICK	0	0	0	0	1,569.00	SF	12.50	12.50	100	1989	1989	3	84	16,475	
3	0504	FP-ELECTRI	0	0	0	0	2.00	UT	2,000.00	2,000.00	100	1989	1989	3	64	2,560	
4	0300	BOAT DCK W	0	0	0	0	836.00	SF	40.00	40.00	100	1990	1990	3	20	6,688	

NASSAU COUNTY PROPERTY

PAGE 1 of 1 5

VALUATION SUMMARY

VALUATION BY	STANDARD
Tax Group: 5	Tax Dist:
BUILDING MARKET VALUE	1,437,733
TOTAL MARKET OB/XF VALUE	33,416
TOTAL LAND VALUE - MARKET	1,050,000
TOTAL MARKET VALUE	2,521,149
SOH/AGL Deduction	0
ASSESSED VALUE	2,521,149
TOTAL EXEMPTION VALUE	0
BASE TAXABLE VALUE	2,521,149
TOTAL JUST VALUE	2,521,149
NCON VALUE	0
INCOME VALUE	
PREVIOUS YEAR MKT VALUE	2,457,550

PERMIT NUM	DESCRIPTION	AMT	ISSUED
5125	NEW CONSTR	366,700	08/29/1988

SALES DATA

OFF RECORD Number	DATE	TYPE INST	Q / U	V / I	RSN CD	SALE PRICE
0727/1483	4/17/1995	WD	Q	I	01	100
GRANTOR: SMITH JOYCE MARTIN &						
GRANTEE: SMITH JOYCE MARTIN						
0505/0067	12/01/1986	WD	Q	V		153,400
GRANTOR:						
GRANTEE:						

BUILDING NOTES

BUILDING DIMENSIONS

BAS=[YR=1993] U5 L5 UOP=[YR=1993] N17 W6 UOP=[YR=1993] W9 STP=[YR=1993] N4 W4 S4 E4 $ W13 S5 E22 N5$ S5 W22 N5 W6 S17 E34$ W34 N43 W7 BAS=[YR=2008] N13 W14 S13 E14$ W21 S14 FOP=[YR=1993] W3 S71 E30 STP=[YR=1993] S12 E15 N12 W15$ E44 N18 W9 S8 W56 N15 U5 L5 N7 R5 U5 N22 W6 N7$ S7 E6 S22 D5 L5 S7 R5 D5 S15 E56 N16 R5 U5 N6$ PTR=E30 FUS=[YR=1993] E7 N13 E14 S13 E7 S43 E2 N1 E10 S1 E9 S33 W9 S1 W11 N1 W23 N16 W5 N17 E5 N22 W6 N21$ W30$ PTR= W120 BAS=[YR=1993] W27 S21 UST=[YR=1993] W2 S6 UOP=[YR=1993] S33 E8 FST=[YR=1993] S15 E26 N15 W26 $ N33 W8 $ E8 N6 W6 $ E6 S6 FGR=[YR=1993] S33 E58 N16 W37 N16 W15 N1 W6 $ E6 S1 E15 N28 $ E120$.

LAND DESCRIPTION

TOTAL OB/XF 33,416

LN	USE CODE	CLS	LAND USE DESCRIPTION	CAP	RD	LOC ZONE	FRONT	DEPTH	TOT LND UTS	UNIT TYPE	DT	DPTH FACT	% COND	TOT ADJ	UNIT PRICE	ADJ UNIT PRICE	LAND VALUE	OTHER ADJUSTMENTS AND NOTES	YEAR	DENSITY	DECL	FRZ	YR	CONSRV
1	000116	C	RES MARSH	0		PUD	0.00	0.00	1.00	LT		1.00	1.00	1.00	1,050,000.00	1,050,000.00	1,050,000							

REVIEW DATE 11/08/2019 BY DJA Total Acres: 0.00 Total Land Value: 1,050,000 Market: 0 Agricultural: 0 Common: 1,050,000 PRINTED 07/30/2025 BY SYS