LOT 59
IN OR 2089/562
LONG POINT #1 PB 5/85-89

KERINS MARY & CRAIG
4 SALT MARSH DR
FERNANDINA BEACH, FL 32034

2025

03-6N-29-00LP-0059-0000

BUILDING CHARACTERISTICS

ELEMENT	CD	CONSTRUCTION
Exterior Wall	16	WD FR STUC 100
Roof Structur	03	GABLE/HIP 100
Roof Cover	03	COMP SHNGL 100
Interior Wall	05	DRYWALL 90
Interior Wall	08	DECORATIVE 10
Interior Floo	14	CARPET 70
Interior Floo	11	CLAY TILE 30
Air Condition	03	CENTRAL 100
Heating Type	04	AIR DUCTED 100
Bedrooms		3 100
Bathrooms		3.5 100
Frame	02	WOOD FRAME 100
Stories	2.	2. 100
Units		0 100
Quality	03	Quality Level 03
DOR CODE	0100	SINGLE FAMILY
MAP NUM		MKT AREA 10
NEIGHBORHOOD/LOC	10007.00	

AREA TYPE	TOTAL GROSS AREA	PCT OF BASE	YEAR	TOT ADJ AREA	SUBAREA MARKET VALUE
BAS	2,649	100	1993	2,649	286,547
FGR	722	55	1993	397	42,944
FOP	149	30	1993	45	4,868
FOP	330	30	1993	99	10,709
FST	28	55	1993	15	1,622
FUS	771	100	1993	771	83,400
PTO	189	5	1993	9	973
UOP	132	20	1993	26	2,812
UOP	154	20	1993	31	3,353
TOTALS	5,124			4,042	437,230

MARKET ADJUSTMENTS

TYPE	MDL	EFF. AREA	TOT ADJ PTS	EFF. BASE RATE	REPL. COST NEW	AYB	EYB	ECON	FNCT	AP	NORM	% COND
0500	11	4,042	125.6182	198.48	802,256	1993	1993	0	0	30	15.50	54.50

1 SFR CUST – 100% - 2021 Heated Area: 3420 HX Base Yr 2021

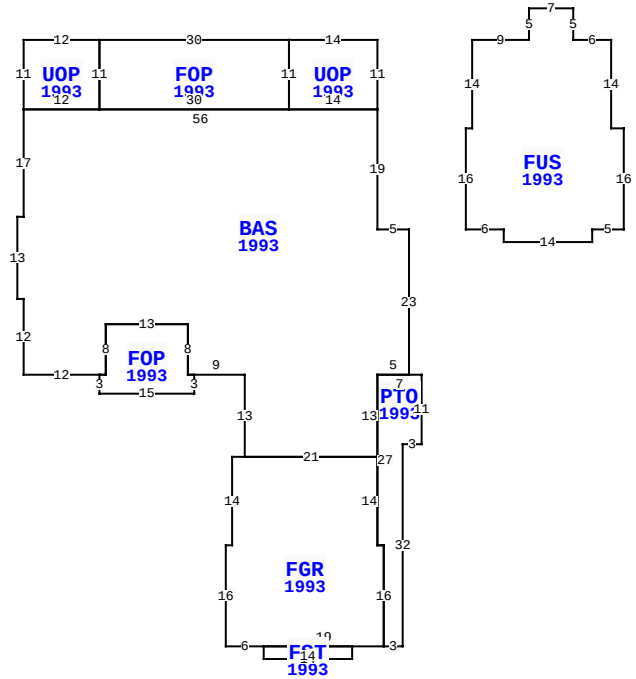

4 SALT MARSH DR, FERNANDINA BEACH

BLD DATE		LGL DATE	
XF DATE		LAND DATE	04/08/2024 MLU
INC DATE		AG DATE	

NASSAU COUNTY PROPERTY

PAGE 1 of 1 5

VALUATION SUMMARY

VALUATION BY		STANDARD
Tax Group: 5	Tax Dist:	
BUILDING MARKET VALUE		437,230
TOTAL MARKET OB/XF VALUE		12,456
TOTAL LAND VALUE - MARKET		550,000
TOTAL MARKET VALUE		999,686
SOH/AGL Deduction		360,792
ASSESSED VALUE		638,894
TOTAL EXEMPTION VALUE	HX HB	50,722
BASE TAXABLE VALUE		588,172
TOTAL JUST VALUE		999,686
NCON VALUE		0
INCOME VALUE		
PREVIOUS YEAR MKT VALUE		981,692

PERMIT NUM	DESCRIPTION	AMT	ISSUED
B1810354	KITCHEN	85,000	10/12/2018
00248	NEW CONSTR	139,350	05/01/1993

SALES DATA

OFF RECORD Number	DATE	TYPE INST	Q U	V I	RSN CD	SALE PRICE
2089/0562	12/15/2016	WD	Q	I	01	560,000
GRANTOR: LANDERS LEO A ET AL						
GRANTEE: KERINS MARY & CRAIG						
1540/1736	12/13/2007	TD	Q	I	01	100
GRANTOR: LANDERS LEO A TRUSTEE						
GRANTEE: LANDERS LEO A TRUST						

BUILDING NOTES

BUILDING DIMENSIONS

UOP=[YR=1993] W14 FOP=[YR=1993] W30 UOP=[YR=1993] W12 S11 BAS=[YR=1993] S17 W1 S13 E1 S12 E12 FOP=[YR=1993] S3 E15 N3 W1 N8 W13 S8W1$E1N8E13 S8 E9 S13 FGR=[YR=1993] W2 S14 W1 S16 E6 FST=[YR=1993] S2 E14 N2 W14$ E19 PTO=[YR=1993] E3 N32 E3 N11 W7 S27 E1 S16$ N16 W1 N14 W21$ E21 N13 E5 N23 W5 N19 W56$ E12 N11 $ S11 E30 N11$ S11 E14 N11$ PTR=E15 FUS=[YR=1993] E9 N5 E7 S5 E6 S14 E2 S16 W5 S2 W14 N2 W6 N16 E1 N14$ W15$.

EXTRA FEATURES

LN	OB/XF CODE	DESCRIPTION	BLD	CAP	L	W	UNITS	UT	Adj R	ADJ UNIT PRICE	ORIG COND	YEAR ON	YEAR ACTUAL	Q	% COND	OB/XF MKT VALUE	NOTES
1	0504	FP-ELECTRI	0	100	0	0	1.00	UT	2,000.00	2,000.00	100	1993	1993	3	72	1,440	
2	0825	BRICK	0	100	0	0	152.00	SF	12.50	12.50	100	1993	1993	3	88	1,672	
3	0812	CONCRETE C	0	100	0	0	2,069.00	SF	4.00	4.00	100	1993	1993	3	64	5,297	
4	1126	CB/STC 8"	0	100	0	0	178.00	SF	8.00	8.00	100	1993	1993	3	64	911	
5	0810	CONCRETE A	0	100	0	0	132.00	SF	6.50	6.50	100	1993	1993	3	64	549	
6	0855	CONC PAVER	0	100	0	0	480.00	SF	7.00	7.00	100	2000	2000	3	77	2,587	

LAND DESCRIPTION

TOTAL OB/XF 12,456

LN	USE CODE	CLS	LAND USE DESCRIPTION	CAP	RD	LOC ZONE	FRONT	DEPTH	TOT LND UTS	UNIT TYPE	DT	DPTH FACT	% COND	TOT ADJ	UNIT PRICE	ADJ UNIT PRICE	LAND VALUE	OTHER ADJUSTMENTS AND NOTES	YEAR	DENSITY	DECL	FRZ	YR	CONSRV
1	000100	C	RES	100		PUD	0.00	0.00	1.00	LT		1.00	1.00	1.00	550,000.00	550,000.00	550,000							

REVIEW DATE 05/12/2019 BY KBA Total Acres: 0.00 Total Land Value: 550,000 Market: 0 Agricultural: 0 Common: 550,000 PRINTED 07/30/2025 BY SYS