LOT 51
LONG POINT #1 PB 5/85-89

RUSH HERBERT III/OCHU KRISTINE
8 JUNIPER CT
FERNANDINA BEACH, FL 32034

2025

03-6N-29-00LP-0051-0000

BUILDING CHARACTERISTICS

ELEMENT	CD	CONSTRUCTION
Exterior Wall	10	ABOVE AVG 70
Exterior Wall	19	COMMON BRK 30
Roof Structur	08	IRREGULAR 100
Roof Cover	03	COMP SHNGL 100
Interior Wall	05	DRYWALL 100
Interior Floo	14	CARPET 60
Interior Floo	12	HARDWOOD 40
Air Condition	03	CENTRAL 100
Heating Type	04	AIR DUCTED 100
Bedrooms		4 100
Bathrooms		4 100
Frame	02	WOOD FRAME 100
Stories	3.	3. 100
Units		0 100
Quality	03	Quality Level 03

DOR CODE	0100	SINGLE FAMILY	
MAP NUM		MKT AREA	10
NEIGHBORHOOD/LOC	10007.00		

AREA TYPE	TOTAL GROSS AREA	PCT OF BASE	YEAR	TOT ADJ AREA	SUBAREA MARKET VALUE
BAS	290	100	2001	290	54,528
FEP	216	80	2012	173	32,529
FGR	1,904	55	2001	1,047	196,865
FOP	144	30	2001	43	8,085
FOP	144	30	2001	43	8,085
FOP	216	30	2001	65	12,222
FOP	216	30	2001	65	12,222
FOP	294	30	2001	88	16,547
FOP	294	30	2001	88	16,547
FOP	294	30	2001	88	16,547
TOTALS	9,423			6,724	1,264,297

MARKET ADJUSTMENTS

TYPE	MDL	EFF. AREA	TOT ADJ PTS	EFF. BASE RATE	REPL. COST NEW	AYB	EYB	ECON	FNCT		NORM	% COND
0500	11	6,724	137.7823	217.70	1,463,815	2001	2001	0	0	0	13.63	86.37

1 SFR CUST – 100% - 2021 Heated Area: 4902 HX Base Yr 2021

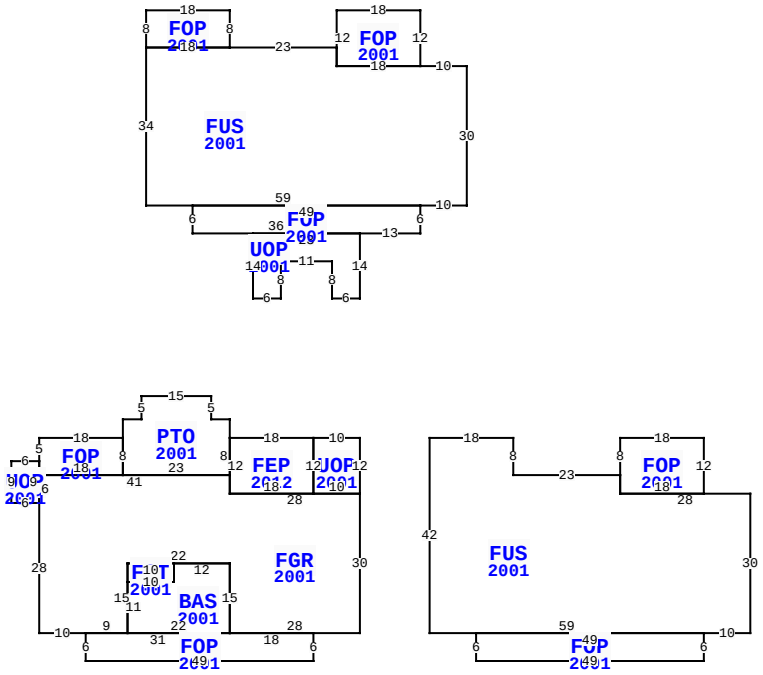

** This building has 17 Sub-Areas

8 JUNIPER CT, FERNANDINA BEACH

BLD DATE		LGL DATE	
XF DATE		LAND DATE	04/08/2024 MLU
INC DATE		AG DATE	

NASSAU COUNTY PROPERTY

PAGE 1 of 1 5

VALUATION SUMMARY

VALUATION BY		STANDARD
Tax Group: 5	Tax Dist:	
BUILDING MARKET VALUE		1,264,297
TOTAL MARKET OB/XF VALUE		40,760
TOTAL LAND VALUE - MARKET		800,000
TOTAL MARKET VALUE		2,105,057
SOH/AGL Deduction		847,373
ASSESSED VALUE		1,257,684
TOTAL EXEMPTION VALUE	HX HB	50,722
BASE TAXABLE VALUE		1,206,962
TOTAL JUST VALUE		2,105,057
NCON VALUE		0
INCOME VALUE		
PREVIOUS YEAR MKT VALUE		2,049,284

PERMIT NUM	DESCRIPTION	AMT	ISSUED
M014945	H/AC	0	03/01/2001
P014591	NEW CONSTR	0	03/01/2001
B0007755	NEW CONSTR	275,000	11/01/2000

SALES DATA

OFF RECORD Number	DATE	TYPE INST	Q / U	V / I	RSN CD	SALE PRICE
2400/0371	10/13/2020	WD	Q	I	02	1,300,000
GRANTOR: MADDOX GUY F JR REV L						
GRANTEE: RUSH HERBERT III &						
2400/0360	10/12/2020	WD	U	I	11	100
GRANTOR: MADDOX LATRELLE M & L						
GRANTEE: MADDOX GUY F JR REV						

BUILDING NOTES

BUILDING DIMENSIONS

UOP=[YR=2001] W10 FEP=[YR=2012] W18 PTO=[YR=2001] N4 W4 N5 W15 S5 W4 S4 FOP=[YR=2001] W18 S5 UOP=[YR=2001] W6 S9 E6 FGR=[YR=2001] S28 E10 FOP=[YR=2001] S6 E49 N6 W18 BAS=[YR=2001] N15 W12 FST=[YR=2001] W10 S4 E10 N4 $ S4 W10 S11 E22 $ W31 $ E9 N15 E22 S15 E28 N30 W28 N4 W41 S6 $ N9 $ S3 E18 N8 $ S8 E23 N8 $ S12 E18 N12 $ S12 E10 N12 $ PTR= N30 UOP=[YR=2001] N14 FOP=[YR=2001] E13 N6 FUS=[YR=2001] E10 N30 W10 FOP=[YR=2001] N12 W18 S12 E18 $ W18 N4 W23 FOP=[YR=2001] N8 W18 S8 E18 $ W18 S34 E59 $ W49 S6 E36 $ W23 S14 E6 N8 E11 S8 E6 $ S30 $ PTR= E15 FUS=[YR=2001] E18 S8 E23 FOP 2001= N8 E18 S12 W18 N4 $ S4 E28 S30 W10 FOP=[YR=2001] S6 W49 N6 E49 $ W59 N42 $ W15 $.

EXTRA FEATURES

LN	OB/XF CODE	DESCRIPTION	BLD	CAP	L	W	UNITS	UT	Adj R	ADJ UNIT PRICE	ORIG COND	YEAR ON	YEAR ACTUAL	Q	% COND	OB/XF MKT VALUE	NOTES
1	0504	FP-ELECTRI	0	100	0	0	1.00	UT	2,000.00	2,000.00	100	2001	2001	3	84	1,680	
2	0812	CONCRETE C	0	100	0	0	5,084.00	SF	4.00	4.00	100	2001	2001	3	79	16,065	
3	0858	SCULP CONC	0	100	0	0	284.00	SF	13.00	13.00	100	2001	2001	3	94	3,470	
4	0858	SCULP CONC	0	100	0	0	303.00	SF	13.00	13.00	100	2001	2001	3	94	3,703	
5	1128	BRICK 12"	0	100	32	2	64.00	SF	14.00	14.00	100	2001	2001	3	94	842	
6	0410	ELEVATOR	0	100	0	0	1.00	UT	15,000.00	15,000.00	100	2001	2001	3	100	15,000	

LAND DESCRIPTION

TOTAL OB/XF 40,760

LN	USE CODE	CLS	LAND USE DESCRIPTION	CAP	RD	LOC ZONE	FRONT	DEPTH	TOT LND UTS	UNIT TYPE	DT	DPTH FACT	% COND	TOT ADJ	UNIT PRICE	ADJ UNIT PRICE	LAND VALUE	OTHER ADJUSTMENTS AND NOTES	YEAR	DENSITY	DECL	FRZ	YR	CONSRV
1	000116	C	RES MARSH	100		PUD	0.00	0.00	1.00	LT		1.00	1.00	1.00	800,000.00	800,000.00	800,000							

REVIEW DATE 05/12/2019 BY KBA Total Acres: 0.00 Total Land Value: 800,000 Market: 0 Agricultural: 0 Common: 800,000 PRINTED 07/30/2025 BY SYS