LOT 34 IN OR 932/1368
LONG POINT #1 PB 5/85-89

DUDIAK ROBERT L/MARTIN SUSAN E
73 LONG POINT DRIVE
FERNANDINA BEACH, FL 32034

2025

03-6N-29-00LP-0034-0000

BUILDING CHARACTERISTICS

ELEMENT	CD	CONSTRUCTION
Exterior Wall	17	CB STUCCO 80
Exterior Wall	16	WD FR STUC 20
Roof Structur	08	IRREGULAR 100
Roof Cover	03	COMP SHNGL 100
Interior Wall	05	DRYWALL 100
Interior Floo	11	CLAY TILE 70
Interior Floo	14	CARPET 30
Air Condition	03	CENTRAL 100
Heating Type	04	AIR DUCTED 100
Bedrooms		4 100
Bathrooms		3 100
Frame	02	WOOD FRAME 100
Stories	2.	2. 100
Units		0 100
Quality	05	Quality Level 05
DOR CODE	0100	SINGLE FAMILY
MAP NUM		MKT AREA 10
NEIGHBORHOOD/LOC	10007.00	

AREA TYPE	TOTAL GROSS AREA	PCT OF BASE	YEAR	TOT ADJ AREA	SUBAREA MARKET VALUE
BAS	465	100	2003	465	97,955
BAS	3,014	100	2003	3,014	634,917
FGR	874	55	2003	481	101,326
FOP	112	30	2003	34	7,163
FOP	117	30	2003	35	7,373
FOP	204	30	2003	61	12,850
FOP	451	30	2003	135	28,439
FOP	598	30	2003	179	37,707
FUS	846	100	2003	846	178,215
UOP	62	20	2003	12	2,527
TOTALS	8,014			5,583	1,176,094

MARKET ADJUSTMENTS

TYPE	MDL	EFF. AREA	TOT ADJ PTS	EFF. BASE RATE	REPL. COST NEW	AYB	EYB	ECON	FNCT		NORM	% COND
0500	11	5,583	148.9676	235.37	1,314,071	2003	2003	0	0	0	10.50	89.50

1 SFR CUST – 100% - 2010 Heated Area: 4325 HX Base Yr 2010

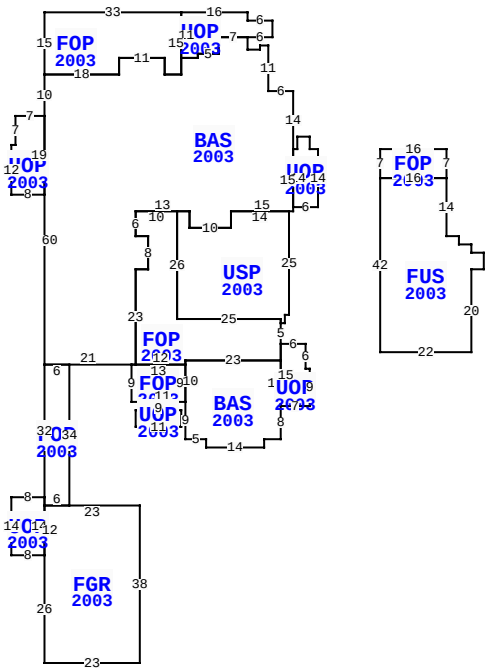

** This building has 16 Sub-Areas

73 LONG POINT DR, FERNANDINA BEACH

BLD DATE		LGL DATE	
XF DATE		LAND DATE	04/08/2024 MLU
INC DATE		AG DATE	

NASSAU COUNTY PROPERTY

PAGE 1 of 1 5

VALUATION SUMMARY

VALUATION BY		STANDARD
Tax Group: 5	Tax Dist:	
BUILDING MARKET VALUE		1,176,094
TOTAL MARKET OB/XF VALUE		25,538
TOTAL LAND VALUE - MARKET		800,000
TOTAL MARKET VALUE		2,001,632
SOH/AGL Deduction		899,687
ASSESSED VALUE		1,101,945
TOTAL EXEMPTION VALUE	HX HB	50,722
BASE TAXABLE VALUE		1,051,223
TOTAL JUST VALUE		2,001,632
NCON VALUE		0
INCOME VALUE		
PREVIOUS YEAR MKT VALUE		1,949,339

PERMIT NUM	DESCRIPTION	AMT	ISSUED
B0210289	NEW CONSTR	371,605	09/01/2002

SALES DATA

OFF RECORD Number	DATE	TYPE INST	Q / U	V / I	RSN CD	SALE PRICE
0932/1368	5/17/2000	WD	Q	V		310,000
GRANTOR: DETURK PHILLIP & BARB						
GRANTEE: DUDIAK ROBERT L & S						
0829/0333	4/08/1998	WD	Q	V		119,000
GRANTOR: LAMBERT GEORGE H & MA						
GRANTEE: DETURK PHILIP & BAR						

BUILDING NOTES

BUILDING DIMENSIONS

UOP=[YR=2003] W2 N3 W3 S3 W1 BAS=[YR=2003] N14 W6 N11 W2 S1 W3 N3 UOP=[YR=2003] E6 N4 W6 N2 W16 FOP=[YR=2003] W33 S15 E18 N4 E11 S4 E4 N15 $ S11 E4 N1 E5 N4 E7$ W7 S4 W5 S1 W4 S4 W4 N4 W11 S4 W18 S10 UOP=[YR=2003] W7 S7 W1 S12 E8 N19 $ S60 FOP=[YR=2003] S32 UOP=[YR=2003] W8 S14 E8 FGR=[YR=2003] S26 E23 N38 W23 S12 $ N14 $ S2 E6 N34 W6 $ E21 FOP=[YR=2003] S9 E2 UOP=[YR=2003] S2 W1 S4 E11 N4 W1 N2 W9 $ E11 BAS=[YR=2003] S9 E5 S2 E14 N2 E4 N8 UOP=[YR=2003] E7 N9 W1 N6 W6 FOP=[YR=2003] N5 USP=[YR=2003] E1 N2 E1 N25 W14 S4 W10 N4 W3 S26 E25 S1 $ N1 W25 N26 W10 S6 E3 S8 W3 S23 E12 N1 E23 N4$ S15 $ N11 W23 S10 $ N9 W13 $ E1 N23 E3 N8 W3 N6 E13 S4 E10 N4 E15 N15 $ S14 E6 N14 $ PTR= E15 FOP=[YR=2003] E16

EXTRA FEATURES

LN	OB/XF CODE	DESCRIPTION	BLD	CAP	L	W	UNITS	UT	Adj R	ADJ UNIT PRICE	ORIG COND	YEAR ON	YEAR ACTUAL	Q	% COND	OB/XF MKT VALUE	NOTES
1	0504	FP-ELECTRI	0	100	0	0	1.00	UT	2,000.00	2,000.00	100	2003	2003	3	86	1,720	
2	0812	CONCRETE C	0	100	0	0	1,056.00	SF	4.00	4.00	100	2003	2003	3	82	3,464	
3	0855	CONC PAVER	0	100	0	0	969.00	SF	10.00	10.00	100	2003	2003	3	82	7,946	
4	1126	CB/STC 8"	0	100	0	0	100.00	SF	8.00	8.00	100	2003	2003	3	82	656	
5	0855	CONC PAVER	0	100	0	0	177.00	SF	10.00	10.00	100	2003	2003	3	82	1,451	
6	0861	POOL GUNIT	0	100	0	0	180.00	SF	85.00	85.00	100	2003	2003	3	29	4,437	
7	0877	JACUZZI	0	100	0	0	1.00	UT	1,000.00	1,000.00	100	2003	2003	3	20	200	
8	0300	BOAT DCK W	0	100	118	4	472.00	SF	40.00	40.00	100	2003	2003	3	30	5,664	

LAND DESCRIPTION

TOTAL OB/XF 25,538

LN	USE CODE	CLS	LAND USE DESCRIPTION	CAP	RD	LOC ZONE	FRONT	DEPTH	TOT LND UTS	UNIT TYPE	DT	DPTH FACT	% COND	TOT ADJ	UNIT PRICE	ADJ UNIT PRICE	LAND VALUE	OTHER ADJUSTMENTS AND NOTES	YEAR	DENSITY	DECL	FRZ	YR	CONSRV
1	000116	C	RES MARSH	100		PUD	0.00	0.00	1.00	LT		1.00	1.00	1.00	800,000.00	800,000.00	800,000							

REVIEW DATE 05/12/2019 BY KBA Total Acres: 0.00 Total Land Value: 800,000 Market: 0 Agricultural: 0 Common: 800,000 PRINTED 07/30/2025 BY SYS