LOT 33
IN OR 2160/1265
LONG POINT #1 PB 5/85-89

GUNDERSON AVA B/GUNDERSON LEIF
75 LONG POINT DR
FERNANDINA BEACH, FL 32034

2025

03-6N-29-00LP-0033-0000

BUILDING CHARACTERISTICS

ELEMENT	CD	CONSTRUCTION
Exterior Wall	16	WD FR STUC 100
Roof Structur	08	IRREGULAR 100
Roof Cover	03	COMP SHNGL 100
Interior Wall	05	DRYWALL 100
Interior Floo	17	PRECAST CN 60
Interior Floo	14	CARPET 40
Air Condition	03	CENTRAL 100
Heating Type	04	AIR DUCTED 100
Bedrooms		4 100
Bathrooms		3.5 100
Frame	02	WOOD FRAME 100
Stories	2.	2. 100
Units		0 100
Quality	04	Quality Level 04

DOR CODE 0100 SINGLE FAMILY
MAP NUM | MKT AREA 10
NEIGHBORHOOD/LOC 10007.00

AREA TYPE	TOTAL GROSS AREA	PCT OF BASE	YEAR	TOT ADJ AREA	SUBAREA MARKET VALUE
BAS	2,363	100	1993	2,363	466,377
DCK	76	10	1993	8	1,579
FOP	105	30	1993	32	6,316
FOP	288	30	1993	86	16,973
FOP	353	30	1993	106	20,921
FUS	1,528	100	1993	1,528	301,576
UOP	186	20	1993	37	7,302
UOP	130	20	2007	26	5,131
TOTALS	5,029			4,186	826,176

MARKET ADJUSTMENTS

TYPE	MDL	EFF. AREA	TOT ADJ PTS	EFF. BASE RATE	REPL. COST NEW	AYB	EYB	ECON	FNCT		NORM	% COND
0500	11	4,186	141.9475	224.28	938,836	1993	2000	0	0	0	12.00	88.00

1 SFR CUST – 100% - 2022 Heated Area: 3891 HX Base Yr 2022

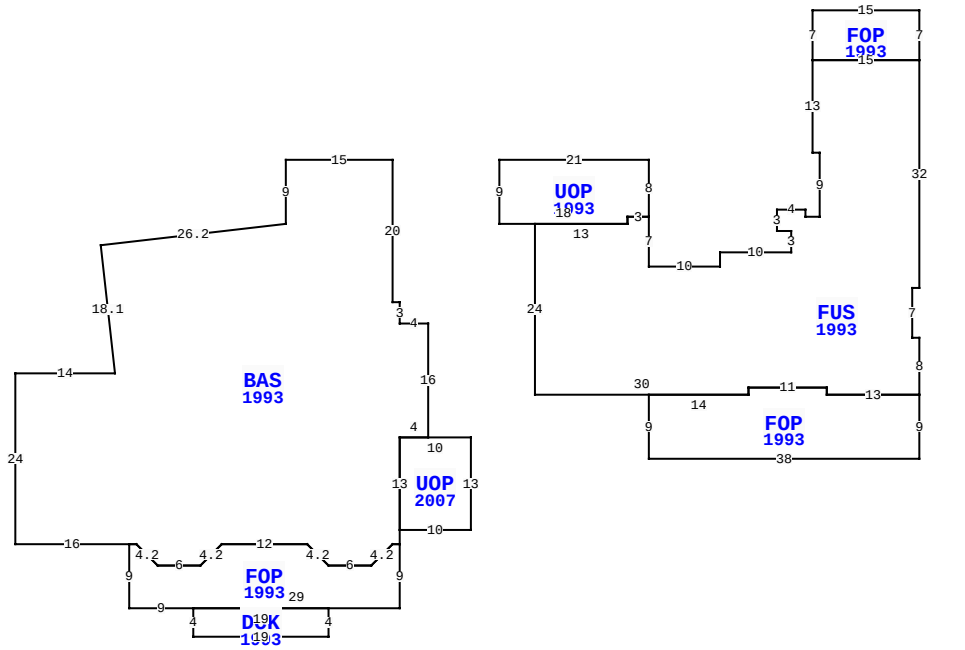

BLD DATE	02/14/2008 DJ	LGL DATE	
XF DATE		LAND DATE	04/08/2024 MLU
INC DATE		AG DATE	

75 LONG POINT DR, FERNANDINA BEACH

EXTRA FEATURES

LN	OB/XF CODE	DESCRIPTION	BLD	CAP	L	W	UNITS	UT	Adj R	ADJ UNIT PRICE	ORIG COND	YEAR ON	YEAR ACTUAL	Q	% COND	OB/XF MKT VALUE	NOTES
1	0504	FP-ELECTRI	0	100	0	0	1.00	UT	2,000.00	2,000.00	100	1993	1993	3	72	1,440	
2	0446	BOX FNC 6'	0	100	0	0	10.00	LF	20.00	20.00	100	1993	1993	3	20	40	
3	1126	CB/STC 8"	0	100	0	0	82.00	SF	8.00	8.00	100	1993	1993	3	64	420	
4	0300	BOAT DCK W	0	100	110	4	440.00	SF	40.00	40.00	100	2001	2001	3	28	4,928	
5	1242	WD DECK A	0	100	0	0	1,442.00	SF	10.50	10.50	100	2004	2004	3	21	3,180	
6	1242	WD DECK A	0	100	0	0	80.00	SF	10.00	10.00	100	2004	2004	3	21	168	
7	0855	CONC PAVER	0	100	0	0	380.00	SF	10.00	10.00	100	2006	2006	3	86	3,268	
8	0855	CONC PAVER	0	100	0	0	4,291.00	SF	10.00	10.00	100	2006	2006	3	86	36,903	

NASSAU COUNTY PROPERTY

PAGE 1 of 2 5

VALUATION SUMMARY

VALUATION BY		STANDARD
Tax Group: 5	Tax Dist:	
BUILDING MARKET VALUE		1,173,169
TOTAL MARKET OB/XF VALUE		50,347
TOTAL LAND VALUE - MARKET		800,000
TOTAL MARKET VALUE		2,023,516
SOH/AGL Deduction		589,994
ASSESSED VALUE		1,433,522
TOTAL EXEMPTION VALUE	HX HB	50,722
BASE TAXABLE VALUE		1,382,800
TOTAL JUST VALUE		2,023,516
NCON VALUE		0
INCOME VALUE		
PREVIOUS YEAR MKT VALUE		1,971,266

PERMIT NUM	DESCRIPTION	AMT	ISSUED
20000863	REMODEL	25,000	01/29/2020
19012360	GARAGE	12,702	12/03/2019
B0311234	ADDITION	54,000	06/01/2003
B9906517	NEW CONSTR	97,000	10/01/1999
8278	NEW CONSTR	291,361	07/31/1992

SALES DATA

OFF RECORD Number	DATE	TYPE INST	Q U	V I	RSN CD	SALE PRICE
2160/1265	11/30/2017	WD	Q	I	01	1,100,000
GRANTOR: BUSCH ROBERT G						
GRANTEE: GUNDERSON LEIF K &						
1511/1649	7/11/2007	WD	Q	I		1,750,000
GRANTOR: RSS QUALITY CONSTRUCT						
GRANTEE: BUSCH ROBERT G						

BUILDING NOTES

BUILDING DIMENSIONS

BAS=[YR=1993] W15 S9 L26 D3 D18 R2 W14 S24 E16
FOP=[YR=1993] S9 E9 DCK=[YR=1993] S4 E19 N4 W19$ E29 N9 W1
D3 L3 W6 U3 L3 W12 D3 L3 W6 U3 L3 W1$ E1 D3 R3 E6
U3 R3 E12 D3 R3 E6 U3 R3 E1 N2 UOP=[YR=2007] E10 N13 W10
S13$ N13 E4 N16 W4 N3 W1 N20$ PTR=E15 UOP=[YR=1993] E21
S8FUS=[YR=1993] S7 E10 N2 E10 N3 W2 N3E4 S1 E2 N9 W1 N13
FOP=[YR=1993] N7 E15 S7 W15$ E15 S32 W1 S7 E1 S8FOP=[YR=1993]
S9 W38 N9 E14 N1 E11 S1E13$ W13 N1 W11 S1 W30 N24 E13N1 E3$
W3 S1 W18 N9$ W15$.

LAND DESCRIPTION

TOTAL OB/XF 50,347

LN	USE CODE	CLS	LAND USE DESCRIPTION	CAP	RD	LOC ZONE	FRONT	DEPTH	TOT LND UTS	UNIT TYPE	DT	DPTH FACT	% COND	TOT ADJ	UNIT PRICE	ADJ UNIT PRICE	LAND VALUE	OTHER ADJUSTMENTS AND NOTES	YEAR	DENSITY	DECL	FRZ	YR	CONSRV
1	000116	C	RES MARSH	100		PUD	0.00	0.00	1.00	LT		1.00	1.00	1.00	800,000.00	800,000.00	800,000							

REVIEW DATE 03/15/2021 BY RK Total Acres: 0.00 Total Land Value: 800,000 Market: 0 Agricultural: 0 Common: 800,000 PRINTED 07/30/2025 BY SYS

LOT 33
IN OR 2160/1265
LONG POINT #1 PB 5/85-89

GUNDERSON AVA B/GUNDERSON LEIF
75 LONG POINT DR
FERNANDINA BEACH, FL 32034

2025

03-6N-29-00LP-0033-0000

BUILDING CHARACTERISTICS

ELEMENT	CD	CONSTRUCTION
Exterior Wall	10	ABOVE AVG 100
Roof Structur	08	IRREGULAR 100
Roof Cover	03	COMP SHNGL 100
Interior Wall	05	DRYWALL 100
Interior Floo	11	CLAY TILE 100
Air Condition	03	CENTRAL 100
Heating Type	04	AIR DUCTED 100
Bedrooms		1 100
Bathrooms		1 100
Frame	02	WOOD FRAME 100
Stories	2.	2. 100
Units		0 100
Quality	04	Quality Level 04
DOR CODE	0100	SINGLE FAMILY
MAP NUM		MKT AREA 10
NEIGHBORHOOD/LOC	10007.00	

AREA TYPE	TOTAL GROSS AREA	PCT OF BASE	YEAR	TOT ADJ AREA	SUBAREA MARKET VALUE
BAS	678	100	2000	678	157,682
FGR	1,117	55	2000	614	142,797
FGR	307	55	2020	169	39,305
UOP	21	20	2000	4	930
UOP	21	20	2000	4	930
UOP	116	20	2000	23	5,349
TOTALS	2,260			1,492	346,993

MARKET ADJUSTMENTS

TYPE	MDL	EFF. AREA	TOT ADJ PTS	EFF. BASE RATE	REPL. COST NEW	AYB	EYB	ECON	FNCT		NORM	% COND
0500	11	1,492	166.3200	262.79	392,083	2000	2000	0	0	0	11.50	88.50

2 SFR CUST – 0% - 2022 Heated Area: 678 HX Base Yr 2022

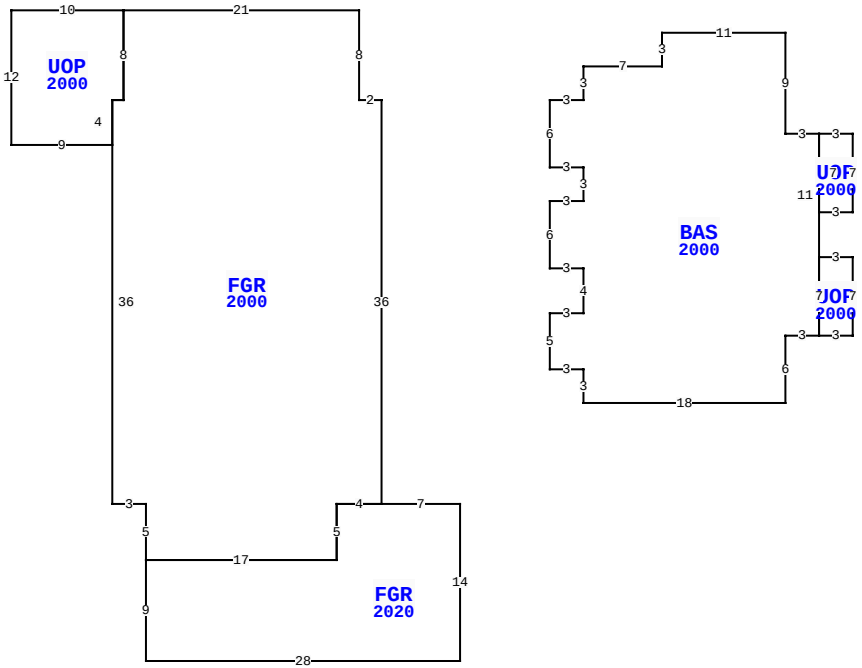

BLD DATE	02/14/2008 DJ	LGL DATE	
XF DATE		LAND DATE	04/08/2024 MLU
INC DATE		AG DATE	

75 LONG POINT DR, FERNANDINA BEACH

NASSAU COUNTY PROPERTY

PAGE 2 of 2 5

VALUATION SUMMARY

VALUATION BY		STANDARD
Tax Group: 5	Tax Dist:	
BUILDING MARKET VALUE		1,173,169
TOTAL MARKET OB/XF VALUE		50,347
TOTAL LAND VALUE - MARKET		800,000
TOTAL MARKET VALUE		2,023,516
SOH/AGL Deduction		589,994
ASSESSED VALUE		1,433,522
TOTAL EXEMPTION VALUE	HX HB	50,722
BASE TAXABLE VALUE		1,382,800
TOTAL JUST VALUE		2,023,516
NCON VALUE		0
INCOME VALUE		
PREVIOUS YEAR MKT VALUE		1,971,266

PERMIT NUM	DESCRIPTION	AMT	ISSUED

SALES DATA

OFF RECORD Number	DATE	TYPE INST	Q U	V I	RSN CD	SALE PRICE
2160/1265	11/30/2017	WD	Q	I	01	1,100,000
GRANTOR: BUSCH ROBERT G						
GRANTEE: GUNDERSON LEIF K &						
1511/1649	7/11/2007	WD	Q	I		1,750,000
GRANTOR: RSS QUALITY CONSTRUCT						
GRANTEE: BUSCH ROBERT G						

BUILDING NOTES

BUILDING DIMENSIONS

FGR=[YR=2000] W2 N8 W21UOP=[YR=2000] W10 S12E9 N4 E1 N8$ S8 W1 S36 E3S5 FGR=[YR=2020] S9 E28 N14 W7 W4 S5 W17$ E17 N5 E4 N36 $ PTR= E15 BAS=[YR=2000] E3 N3 E7 N3 E11 S9 E3 UOP=[YR=2000] E3 S7W3 N7 $S11 UOP=[YR=2000] E3 S7 W3 N7 $ S7 W3 S6 W18 N3 W3 N5 E3 N4 W3 N6 E3 N3 W3 N6 $ W15 $.

EXTRA FEATURES

LN	OB/XF CODE	DESCRIPTION	BLD	CAP	L	W	UNITS	UT	Adj R	ADJ UNIT PRICE	ORIG COND	YEAR ON	YEAR ACTUAL	Q	% COND	OB/XF MKT VALUE	NOTES

LAND DESCRIPTION

TOTAL OB/XF 0

LN	USE CODE	CLS	LAND USE DESCRIPTION	CAP	RD	LOC ZONE	FRONT	DEPTH	TOT LND UTS	UNIT TYPE	DT	DPTH FACT	% COND	TOT ADJ	UNIT PRICE	ADJ UNIT PRICE	LAND VALUE	OTHER ADJUSTMENTS AND NOTES	YEAR	DENSITY	DECL	FRZ	YR	CONSRV

REVIEW DATE 03/15/2021 BY RK Total Acres: 0.00 Total Land Value: 800,000 Market: 0 Agricultural: 0 Common: 800,000 PRINTED 07/30/2025 BY SYS