LOT 27
LONG POINT #1 PB 5/85-89

SYNDENPAM TRUST/SYNNOTT DENNIS J TRUSTEE
70 LONG POINT DR
FERNANDINA BEACH, FL 32034

2025

03-6N-29-00LP-0027-0000

BUILDING CHARACTERISTICS

ELEMENT	CD	CONSTRUCTION
Exterior Wall	16	WD FR STUC 100
Roof Structur	08	IRREGULAR 100
Roof Cover	03	COMP SHNGL 100
Interior Wall	05	DRYWALL 100
Interior Floo	14	CARPET 70
Interior Floo	11	CLAY TILE 30
Air Condition	03	CENTRAL 100
Heating Type	04	AIR DUCTED 100
Bedrooms		3 100
Bathrooms		3 100
Frame	02	WOOD FRAME 100
Stories	1.	1. 100
Units		0 100
Quality	05	Quality Level 05
DOR CODE	0100	SINGLE FAMILY
MAP NUM		MKT AREA 10
NEIGHBORHOOD/LOC	10007.00	

AREA TYPE	TOTAL GROSS AREA	PCT OF BASE	YEAR	TOT ADJ AREA	SUBAREA MARKET VALUE
BAS	2,809	100	1996	2,809	543,953
FGR	780	55	1996	429	83,074
FOP	56	30	1996	17	3,292
FOP	89	30	1996	27	5,229
FST	20	55	1996	11	2,130
FST	24	55	1996	13	2,517
STR	28	10	1996	3	581
UOP	144	20	1996	29	5,616
UOP	160	20	1996	32	6,196
TOTALS	4,110			3,370	652,588

MARKET ADJUSTMENTS

TYPE	MDL	EFF. AREA	TOT ADJ PTS	EFF. BASE RATE	REPL. COST NEW	AYB	EYB	ECON	FNCT		NORM	% COND
0500	11	3,370	142.5117	225.17	758,823	1996	1996	0	0	0	14.00	86.00

1 SFR CUST – 100% - 2018 Heated Area: 2809 HX Base Yr 2018

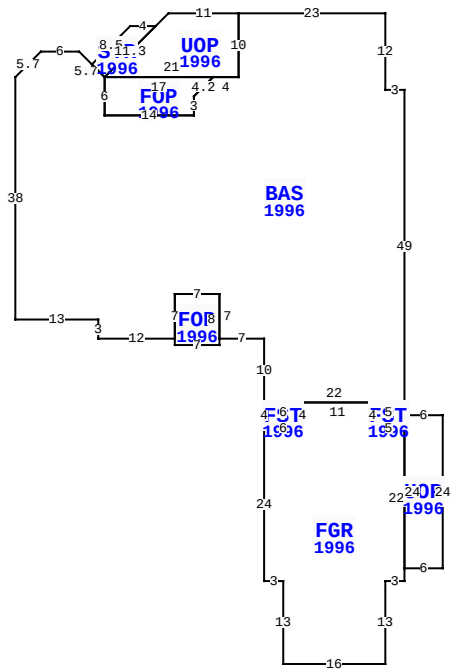

70 LONG POINT DR, FERNANDINA BEACH

BLD DATE	01/24/2008 DJ	LGL DATE	
XF DATE		LAND DATE	04/08/2024 MLU
INC DATE		AG DATE	

NASSAU COUNTY PROPERTY

PAGE 1 of 1 5

VALUATION SUMMARY

VALUATION BY		STANDARD
Tax Group: 5	Tax Dist:	
BUILDING MARKET VALUE		652,588
TOTAL MARKET OB/XF VALUE		30,755
TOTAL LAND VALUE - MARKET		750,000
TOTAL MARKET VALUE		1,433,343
SOH/AGL Deduction		612,520
ASSESSED VALUE		820,823
TOTAL EXEMPTION VALUE	HX HB	50,722
BASE TAXABLE VALUE		770,101
TOTAL JUST VALUE		1,433,343
NCON VALUE		0
INCOME VALUE		
PREVIOUS YEAR MKT VALUE		1,405,183

PERMIT NUM	DESCRIPTION	AMT	ISSUED
B9905887	SWIM POOL	28,000	03/01/1999
B9602629	NEW CONSTR	170,000	03/01/1996

SALES DATA

OFF RECORD Number	DATE	TYPE INST	Q U	V I	RSN CD	SALE PRICE
2480/1799	7/20/2021	WD	U	I	11	100
GRANTOR: SYNNOTT DENNIS J & PA						
GRANTEE: SYNDENPAM TRUST						
2120/1149	5/15/2017	WD	Q	I	02	750,000
GRANTOR: KOCHIS JOSEPH A & CHE						
GRANTEE: SYNNOTT DENNIS J &						

BUILDING NOTES

BUILDING DIMENSIONS

BAS=[YR=1996] W23 UOP=[YR=1996] W11 D2 L2 STR=[YR=1996] W4 D6 L6 D2 R2 U8 R8 $ D8 L8 FOP=[YR=1996] S6 E14 N3 U3 R3 W17$ E21 N10$ S10 W4 D3 L3 S3 W14 N6 U4 L4 W6 D4 L4 S38 E13 S3 E12 FOP=[YR=1996] S1 E7 N8 W7S7$ N7 E7 S7 E7 S10 FST=[YR=1996] S4FGR=[YR=1996] S24 E3 S13 E16 N13 E3 N2 UOP=[YR=1996] E6 N24 W6 FST=[YR=1996] N2 W5 S4 E5 N2$ S24$ N22 W5 N4W11 S4 W6$ E6 N4 W6$ E22 N49 W3 N12$.

EXTRA FEATURES

LN	OB/XF CODE	DESCRIPTION	BLD	CAP	L	W	UNITS	UT	Adj R	ADJ UNIT PRICE	ORIG COND	YEAR ON	YEAR ACTUAL	Q	% COND	OB/XF MKT VALUE	NOTES
1	0504	FP-ELECTRI	0	100	0	0	1.00	UT	2,000.00	2,000.00	100	1996	1996	3	77	1,540	
2	0855	CONC PAVER	0	100	0	0	1,928.00	SF	7.00	7.00	100	2014	2014	3	94	12,686	
3	0825	BRICK	0	100	0	0	77.00	SF	12.50	12.50	100	1996	1996	3	91	876	
4	0861	POOL GUNIT	0	100	0	0	588.00	SF	85.00	85.00	100	2000	2000	3	23	11,495	
5	0877	JACUZZI	0	100	0	0	1.00	UT	1,000.00	1,000.00	100	2000	2000	3	20	200	
6	0845	KOOL DECK	0	100	0	0	709.00	SF	7.25	7.25	100	2000	2000	3	77	3,958	

LAND DESCRIPTION

TOTAL OB/XF 30,755

LN	USE CODE	CLS	LAND USE DESCRIPTION	CAP	RD	LOC ZONE	FRONT	DEPTH	TOT LND UTS	UNIT TYPE	DT	DPTH FACT	% COND	TOT ADJ	UNIT PRICE	ADJ UNIT PRICE	LAND VALUE	OTHER ADJUSTMENTS AND NOTES	YEAR	DENSITY	DECL	FRZ	YR	CONSRV
1	000140	C	RES GOLF	100		PUD	0.00	0.00	1.00	LT		1.00	1.00	1.00	750,000.00	750,000.00	750,000							

REVIEW DATE 05/12/2019 BY KBA Total Acres: 0.00 Total Land Value: 750,000 Market: 0 Agricultural: 0 Common: 750,000 PRINTED 07/30/2025 BY SYS