LOT 3 & PT LOT 2
IN OR 2075/1024
LONG POINT #1 PB 5/85-89

YOUNG BRIAN S & ANNETTE M
22 LONG POINT DR
FERNANDINA BEACH, FL 32034

2025

03-6N-29-00LP-0003-0000

NASSAU COUNTY PROPERTY

BUILDING CHARACTERISTICS

ELEMENT	CD	CONSTRUCTION
Exterior Wall	16	WD FR STUC 100
Roof Structur	08	IRREGULAR 100
Roof Cover	03	COMP SHNGL 100
Interior Wall	05	DRYWALL 100
Interior Floo	12	HARDWOOD 60
Interior Floo	11	CLAY TILE 40
Air Condition	03	CENTRAL 100
Heating Type	04	AIR DUCTED 100
Bedrooms		3 100
Bathrooms		3.5 100
Frame	02	WOOD FRAME 100
Stories	2.	2. 100
Units		0 100
BUD8 Adjustme	05	DIST 1A 100
Occupancy	00	NONE 100
Quality	03	Quality Level 03
DOR CODE	0100	SINGLE FAMILY
MAP NUM		MKT AREA 10
NEIGHBORHOOD/LOC	10007.00	

AREA TYPE	TOTAL GROSS AREA	PCT OF BASE	YEAR	TOT ADJ AREA	SUBAREA MARKET VALUE
BAL	210	15	2019	32	5,201
BAS	2,309	100	1993	2,309	375,316
BAS	426	100	2010	426	69,244
BAS	152	100	2019	152	24,707
BAS	326	100	2019	326	52,990
FOP	75	30	2019	22	3,576
FOP	86	30	2019	26	4,226
FOP	240	30	2019	72	11,703
FOP	338	30	2019	101	16,417
FUS	769	100	1993	769	124,997
TOTALS	7,339			5,311	863,275

MARKET ADJUSTMENTS

TYPE	MDL	EFF. AREA	TOT ADJ PTS	EFF. BASE RATE	REPL. COST NEW	AYB	EYB	ECON	FNCT		NORM	% COND
0500	01	5,311	109.4400	172.92	918,378	1987	2012	0	0	0	6.00	94.00

1 SFR CUST – 100% - 2025 Heated Area: 4725 HX Base Yr 2025

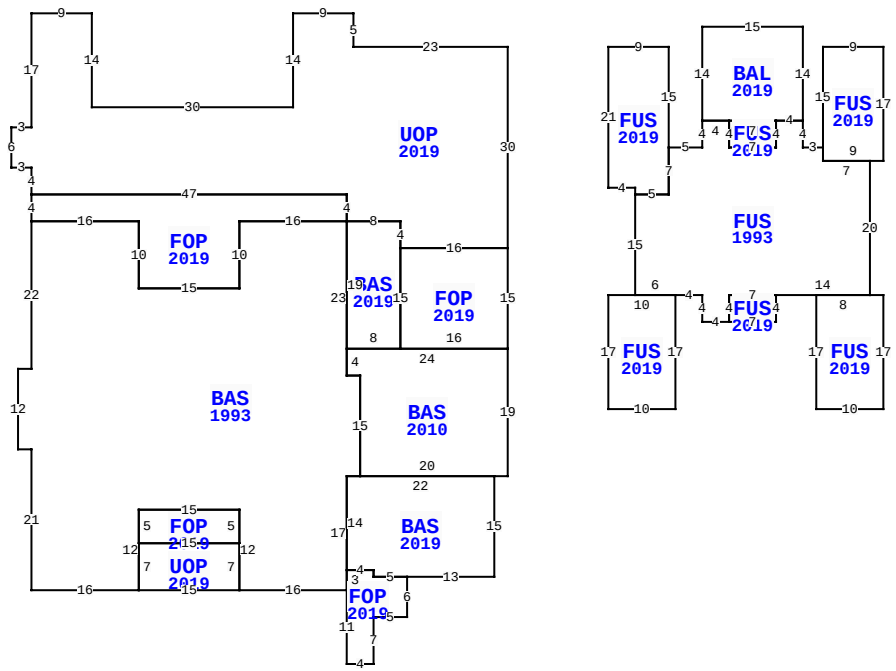

** This building has 18 Sub-Areas

22 LONG POINT DR, FERNANDINA BEACH

BLD DATE		LGL DATE	
XF DATE		LAND DATE	04/08/2024 MLU
INC DATE		AG DATE	

VALUATION SUMMARY

VALUATION BY		STANDARD
Tax Group: 5	Tax Dist:	
BUILDING MARKET VALUE		1,321,724
TOTAL MARKET OB/XF VALUE		67,391
TOTAL LAND VALUE - MARKET		750,000
TOTAL MARKET VALUE		2,139,115
SOH/AGL Deduction		0
ASSESSED VALUE		2,139,115
TOTAL EXEMPTION VALUE	HX HB	50,722
BASE TAXABLE VALUE		2,088,393
TOTAL JUST VALUE		2,139,115
NCON VALUE		0
INCOME VALUE		
PREVIOUS YEAR MKT VALUE		2,080,700

PERMIT NUM	DESCRIPTION	AMT	ISSUED
B1810734	SWIM POOL	70,600	10/24/2018
B1803946	REMODEL	396,000	04/18/2018
1706703	DEMO TO STUDS	0	07/26/2017
BP3909	N/A	271,580	02/27/1987

SALES DATA

OFF RECORD Number	DATE	TYPE INST	Q / U	V / I	RSN CD	SALE PRICE
2075/1024	8/29/2016	SW	Q	I	01	759,000
GRANTOR: TRUMAN 2012 SC2 TITLE						
GRANTEE: YOUNG BRIAN S & ANN						
2008/0748	10/12/2015	CT	U	I	18	100
GRANTOR: CLERK OF COURT						
GRANTEE: TRUMAN 2012 SC2 TIT						

BUILDING NOTES

EXTRA FEATURES

LN	OB/XF CODE	DESCRIPTION	BLD	CAP	L	W	UNITS	UT	Adj R	ADJ UNIT PRICE	ORIG COND	YEAR ON	YEAR ACTUAL	Q	% COND	OB/XF MKT VALUE	NOTES
1	0504	FP-ELECTRI	0	100	0	0	1.00	UT	2,000.00	2,000.00	100	1987	1987	3	60	1,200	
2	0855	CONC PAVER	0	100	0	0	2,736.00	SF	10.00	10.00	100	2019	2019	3	97	26,539	
3	0504	FP-ELECTRI	0	100	0	0	1.00	UT	2,000.00	2,000.00	100	1995	1995	3	76	1,520	
4	0855	CONC PAVER	0	100	0	0	335.00	SF	10.00	10.00	100	2019	2019	3	97	3,250	
5	0855	CONC PAVER	0	100	0	0	150.00	SF	15.00	15.00	100	2019	2019	3	97	2,183	
6	0861	POOL GUNIT	0	100	0	0	420.00	SF	85.00	85.00	100	2019	2019	3	87	31,059	
7	0871	POOL HTR R	0	100	0	0	1.00	UT	2,000.00	2,000.00	100	2019	2019	3	82	1,640	

BUILDING DIMENSIONS

UOP=[YR=2019] W23 N5 W9 S14 W30 N14 W9 S17W3S6E3S4
FOP=[YR=2019] S4 BAS=[YR=1993] S22 W2S12E2 S21 E16
UOP=[YR=2019] E15 N7 FOP=[YR=2019] N5 W15 S5 E15$ W15 S7$ N12
E15 S12 E16 FOP=[YR=2019] S11 E4N7 E5 N6 BAS=[YR=2019] E13
N15 BAS=[YR=2010] E2N19 FOP=[YR=2019] N15W16 BAS=[YR=2019]
N4W8S19 E8N15$ S15E16$ W24S4E2S15E20$ W22S14E4S1E5$ W5N1W4S3$
N17E2 N15W2N23W16S10W15N10W16$ E16 S10E15N10E16N4W47$
E47S4E8S4 E16N30$ PTR=E15 FUS=[YR=2019] E9S15 FUS=[YR=1993]
E5N4 BAL=[YR=2019] N14E15S14 W4 FUS=[YR=2019] S4W7N4E7$ W11$
E4S4 E7N4E4S4E3FUS=[YR=2019] N15 E9 S17 W9 N2$ S2 E7 S20
FUS=[YR=2019] E2 S17 W10 N17 E8$ W14 FUS=[YR=2019] S4 W7 N4
E7$ W7 S4 W4 N4 W4 FUS=[YR=2019] S17 W10 N17 E10$ W6 N15 E5

LAND DESCRIPTION

TOTAL OB/XF 67,391

LN	USE CODE	CLS	LAND USE DESCRIPTION	CAP	RD	LOC ZONE	FRONT	DEPTH	TOT LND UTS	UNIT TYPE	DT	DPTH FACT	% COND	TOT ADJ	UNIT PRICE	ADJ UNIT PRICE	LAND VALUE	OTHER ADJUSTMENTS AND NOTES	YEAR	DENSITY	DECL	FRZ	YR	CONSRV
1	000140	C	RES GOLF	100		PUD	0.00	0.00	1.00	LT		1.00	1.00	1.00	750,000.00	750,000.00	750,000							

REVIEW DATE 05/07/2019 BY DJ Total Acres: 0.00 Total Land Value: 750,000 Market: 0 Agricultural: 0 Common: 750,000 PRINTED 07/30/2025 BY SYS

LOT 3 & PT LOT 2
IN OR 2075/1024
LONG POINT #1 PB 5/85-89

YOUNG BRIAN S & ANNETTE M
22 LONG POINT DR
FERNANDINA BEACH, FL 32034

2025

03-6N-29-00LP-0003-0000

NASSAU COUNTY PROPERTY

BUILDING CHARACTERISTICS

ELEMENT	CD	CONSTRUCTION
Exterior Wall	16	WD FR STUC 100
Roof Structur	03	GABLE/HIP 100
Roof Cover	11	SLATE 100
Interior Wall	05	DRYWALL 100
Interior Floo	14	CARPET 100
Air Condition	03	CENTRAL 100
Heating Type	04	AIR DUCTED 100
Bedrooms		1 100
Bathrooms		1 100
Frame	02	WOOD FRAME 100
Stories	0	0 100
Units		0 100
Quality	04	Quality Level 04

DOR CODE 0100 SINGLE FAMILY
MAP NUM | MKT AREA 10
NEIGHBORHOOD/LOC 10007.00

AREA TYPE	TOTAL GROSS AREA	PCT OF BASE	YEAR	TOT ADJ AREA	SUBAREA MARKET VALUE
BAS	98	100	1993	98	21,769
BAS	457	100	1993	457	101,512
FDG	792	60	1993	475	105,511
TOTALS	1,347			1,030	228,792

MARKET ADJUSTMENTS

TYPE	MDL	EFF. AREA	TOT ADJ PTS	EFF. BASE RATE	REPL. COST NEW	AYB	EYB	ECON	FNCT		NORM	% COND
0500	11	1,030	172.4976	272.55	280,726	1987	1987	0	0	0	18.50	81.50

2 SFR CUST – 0% - 2025 Heated Area: 555 HX Base Yr 2025

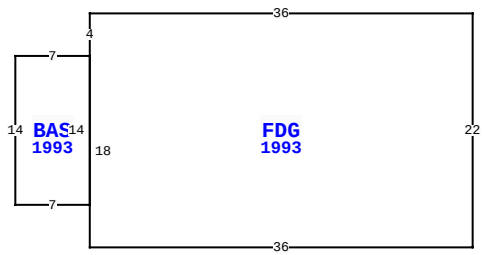

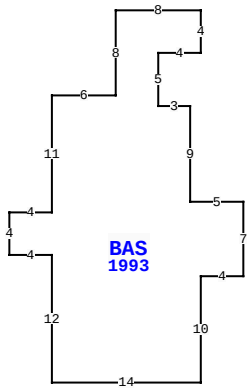

22 LONG POINT DR, FERNANDINA BEACH

BLD DATE		LGL DATE	
XF DATE		LAND DATE	04/08/2024 MLU
INC DATE		AG DATE	

NASSAU COUNTY PROPERTY — VALUATION SUMMARY

VALUATION BY		STANDARD
Tax Group: 5	Tax Dist:	
BUILDING MARKET VALUE		1,321,724
TOTAL MARKET OB/XF VALUE		67,391
TOTAL LAND VALUE - MARKET		750,000
TOTAL MARKET VALUE		2,139,115
SOH/AGL Deduction		0
ASSESSED VALUE		2,139,115
TOTAL EXEMPTION VALUE	HX HB	50,722
BASE TAXABLE VALUE		2,088,393
TOTAL JUST VALUE		2,139,115
NCON VALUE		0
INCOME VALUE		
PREVIOUS YEAR MKT VALUE		2,080,700

PERMIT NUM	DESCRIPTION	AMT	ISSUED

SALES DATA

OFF RECORD Number	DATE	TYPE INST	Q / U	V / I	RSN CD	SALE PRICE
2075/1024	8/29/2016	SW	Q	I	01	759,000
GRANTOR: TRUMAN 2012 SC2 TITLE						
GRANTEE: YOUNG BRIAN S & ANN						
2008/0748	10/12/2015	CT	U	I	18	100
GRANTOR: CLERK OF COURT						
GRANTEE: TRUMAN 2012 SC2 TIT						

BUILDING NOTES

BUILDING DIMENSIONS

FDG=[YR=1993] W36 S4 BAS=[YR=1993] W7S14E7 N14$ S18 E36 N22$ PTR=E20 BAS=[YR=1993] E4 N11 E6 N8 E8 S4 W4 S5 E3 S9 E5 S7 W4 S10 W14 N12 W4 N4$ W20$.

EXTRA FEATURES

LN	OB/XF CODE	DESCRIPTION	BLD	CAP	L	W	UNITS	UT	Adj R	ADJ UNIT PRICE	ORIG COND	YEAR ON	YEAR ACTUAL	Q	% COND	OB/XF MKT VALUE	NOTES

LAND DESCRIPTION

TOTAL OB/XF 0

LN	USE CODE	CLS	LAND USE DESCRIPTION	CAP	RD	LOC ZONE	FRONT	DEPTH	TOT LND UTS	UNIT TYPE	DT	DPTH FACT	% COND	TOT ADJ	UNIT PRICE	ADJ UNIT PRICE	LAND VALUE	OTHER ADJUSTMENTS AND NOTES	YEAR	DENSITY	DECL	FRZ	YR	CONSRV

REVIEW DATE 05/07/2019 BY DJ Total Acres: 0.00 Total Land Value: 750,000 Market: 0 Agricultural: 0 Common: 750,000 PRINTED 07/30/2025 BY SYS

LOT 3 & PT LOT 2
IN OR 2075/1024
LONG POINT #1 PB 5/85-89

YOUNG BRIAN S & ANNETTE M
22 LONG POINT DR
FERNANDINA BEACH, FL 32034

2025

03-6N-29-00LP-0003-0000

BUILDING CHARACTERISTICS

ELEMENT	CD	CONSTRUCTION
Exterior Wall	16	WD FR STUC 100
Roof Structur	03	GABLE/HIP 100
Roof Cover	11	SLATE 100
Interior Wall	05	DRYWALL 100
Interior Floo	14	CARPET 100
Air Condition	03	CENTRAL 100
Heating Type	04	AIR DUCTED 100
Bedrooms		1 100
Bathrooms		1 100
Frame	02	WOOD FRAME 100
Stories	0	0 100
Units		0 100
Quality	04	Quality Level 04
DOR CODE	0100	SINGLE FAMILY
MAP NUM		MKT AREA 10
NEIGHBORHOOD/LOC	10007.00	

AREA TYPE	TOTAL GROSS AREA	PCT OF BASE	YEAR	TOT ADJ AREA	SUBAREA MARKET VALUE
BAS	308	100	2010	308	69,347
BAS	422	100	2010	422	95,015
FDG	484	60	2010	290	65,295
TOTALS	1,214			1,020	229,657

MARKET ADJUSTMENTS

TYPE	MDL	EFF. AREA	TOT ADJ PTS	EFF. BASE RATE	REPL. COST NEW	AYB	EYB	ECON	FNCT		NORM	% COND
0500	11	1,020	169.6464	268.04	273,401	1992	1992	0	0	0	16.00	84.00

3 SFR CUST – 0% - 2025 Heated Area: 730 HX Base Yr 2025

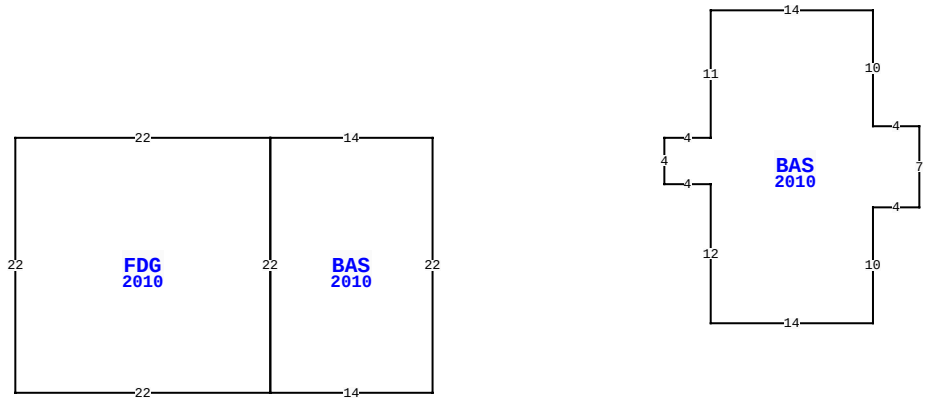

22 LONG POINT DR, FERNANDINA BEACH

BLD DATE		LGL DATE	
XF DATE		LAND DATE	04/08/2024 MLU
INC DATE		AG DATE	

NASSAU COUNTY PROPERTY

PAGE 3 of 3 5

VALUATION SUMMARY

VALUATION BY		STANDARD
Tax Group: 5	Tax Dist:	
BUILDING MARKET VALUE		1,321,724
TOTAL MARKET OB/XF VALUE		67,391
TOTAL LAND VALUE - MARKET		750,000
TOTAL MARKET VALUE		2,139,115
SOH/AGL Deduction		0
ASSESSED VALUE		2,139,115
TOTAL EXEMPTION VALUE	HX HB	50,722
BASE TAXABLE VALUE		2,088,393
TOTAL JUST VALUE		2,139,115
NCON VALUE		0
INCOME VALUE		
PREVIOUS YEAR MKT VALUE		2,080,700

PERMIT NUM	DESCRIPTION	AMT	ISSUED

SALES DATA

OFF RECORD Number	DATE	TYPE INST	Q / U	V / I	RSN CD	SALE PRICE
2075/1024	8/29/2016	SW	Q	I	01	759,000
GRANTOR: TRUMAN 2012 SC2 TITLE						
GRANTEE: YOUNG BRIAN S & ANN						
2008/0748	10/12/2015	CT	U	I	18	100
GRANTOR: CLERK OF COURT						
GRANTEE: TRUMAN 2012 SC2 TIT						

BUILDING NOTES

BUILDING DIMENSIONS

BAS=[YR=2010] W14 FDG=[YR=2010] W22 S22 E22 N22$ S22 E14 N22$ PTR=E20 BAS=[YR=2010] E4 N11 E14 S10 E4 S7 W4 S10 W14 N12 W4 N4$ W20$.

EXTRA FEATURES

L N	OB/XF CODE	DESCRIPTION	BLD	CAP	L	W	UNITS	UT	Adj R	ADJ UNIT PRICE	ORIG COND	YEAR ON	YEAR ACTUAL	Q	% COND	OB/XF MKT VALUE	NOTES

LAND DESCRIPTION

TOTAL OB/XF 0

L N	USE CODE	CLS	LAND USE DESCRIPTION	CAP	R D	LOC ZONE	FRONT	DEPTH	TOT LND UTS	UNIT TYPE	D T	DPTH FACT	% COND	TOT ADJ	UNIT PRICE	ADJ UNIT PRICE	LAND VALUE	OTHER ADJUSTMENTS AND NOTES	YEAR	DENSITY	DECL	FRZ	YR	CONSRV

REVIEW DATE 05/07/2019 BY DJ Total Acres: 0.00 Total Land Value: 750,000 Market: 0 Agricultural: 0 Common: 750,000 PRINTED 07/30/2025 BY SYS