PT OF E1/2
IN OR 2480/1190

PASKE ROBERT J & REBECCA S
57353 SANDY OAKS LN
CALLAHAN, FL 32011

2025

03-2N-25-0000-0001-0020

BUILDING CHARACTERISTICS

ELEMENT	CD	CONSTRUCTION
Exterior Wall	31	HARDIE BRD 100
Roof Structur	03	GABLE/HIP 100
Roof Cover	03	COMP SHNGL 90
Roof Cover	12	MODULAR MT 10
Interior Wall	05	DRYWALL 100
Interior Floo	11	CLAY TILE 60
Interior Floo	14	CARPET 40
Air Condition	03	CENTRAL 100
Heating Type	04	AIR DUCTED 100
Bedrooms		3 100
Bathrooms		2.5 100
Frame	02	WOOD FRAME 100
Stories	1.	1. 100
Units		0 100
Occupancy	00	NONE 100
Quality	03	Quality Level 03
DOR CODE	0100	SINGLE FAMILY
MAP NUM		MKT AREA 08
NEIGHBORHOOD/LOC	8026.00	

AREA TYPE	TOTAL GROSS AREA	PCT OF BASE	YEAR	TOT ADJ AREA	SUBAREA MARKET VALUE
BAS	2,042	100	2022	2,042	300,989
FGR	540	55	2022	297	43,778
FOP	288	30	2022	86	12,676
FOP	332	30	2022	100	14,740
STP	49	10	2022	5	737
TOTALS	3,251			2,530	372,920

MARKET ADJUSTMENTS

TYPE	MDL	EFF. AREA	TOT ADJ PTS	EFF. BASE RATE	REPL. COST NEW	AYB	EYB	ECON	FNCT		NORM	% COND
0900	01	2,530	112.2240	148.14	374,794	2022	2022	0	0	0	0.50	99.50

1 SNGL FAM – 100% - 2023 Heated Area: 2042 HX Base Yr 2023

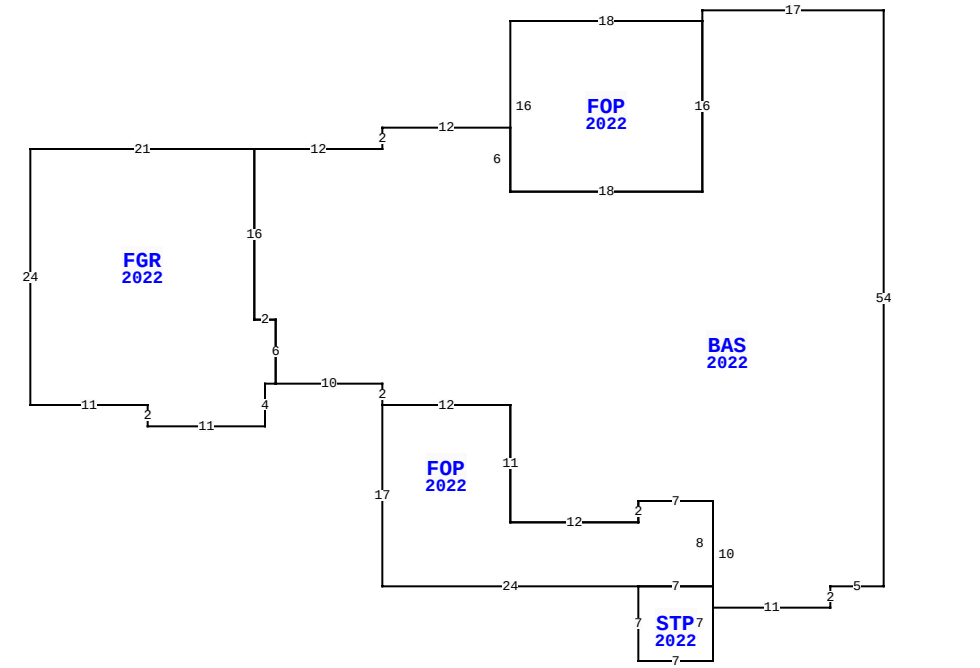

57353 SANDY OAKS LN, CALLAHAN

BLD DATE		LGL DATE	
XF DATE		LAND DATE	05/09/2025 MLU
INC DATE		AG DATE	

NASSAU COUNTY PROPERTY

PAGE 1 of 1 6

VALUATION SUMMARY

VALUATION BY		STANDARD
Tax Group: 6	Tax Dist:	
BUILDING MARKET VALUE		372,920
TOTAL MARKET OB/XF VALUE		3,442
TOTAL LAND VALUE - MARKET		136,500
TOTAL MARKET VALUE		512,862
SOH/AGL Deduction		141,343
ASSESSED VALUE		371,519
TOTAL EXEMPTION VALUE	HX HB	50,722
BASE TAXABLE VALUE		320,797
TOTAL JUST VALUE		512,862
NCON VALUE		0
INCOME VALUE		
PREVIOUS YEAR MKT VALUE		470,386

PERMIT NUM	DESCRIPTION	AMT	ISSUED
21014600	CO ISSUED	0	10/05/2022
21014600	NEW CONSTR	346,161	10/22/2021

SALES DATA

OFF RECORD Number	DATE	TYPE INST	Q / U	V / I	RSN CD	SALE PRICE
2480/1190	7/16/2021	WD	U	V	11	100
GRANTOR: PASKE ROBERT J & REBE						
GRANTEE: PASKE ROBERT J & RE						
2296/0624	8/05/2019	WD	U	V	11	100
GRANTOR: PASKE ROBERT J & REBE						
GRANTEE: PASKE JESSICA R & R						

BUILDING NOTES

BUILDING DIMENSIONS

BAS=[YR=2022] W17 S1 FOP=[YR=2022] W18 S16 E18 N16$ S16 W18 N6 W12 S2 W12 FGR=[YR=2022] W21 S24 E11 S2 E11 N4 E1 N6 W2 N16$ S16 E2 S6 E10 S2 FOP=[YR=2022] S17 E24 STP=[YR=2022] S7 E7 N7 W7$ E7 N8 W7 S2 W12 N11 W12 $ E12 S11 E12 N2 E7 S10 E11 N2 E5 N54$.

EXTRA FEATURES

LN	OB/XF CODE	DESCRIPTION	BLD	CAP	L	W	UNITS	UT	Adj R	ADJ UNIT PRICE	ORIG COND	YEAR ON	YEAR ACTUAL	Q	% COND	OB/XF MKT VALUE	NOTES
1	0810	CONCRETE A	0	100	0	0	256.00	SF	6.50	6.50	100	2022	2022	3	99	1,647	
2	0810	CONCRETE A	0	100	0	0	279.00	SF	6.50	6.50	100	2022	2022	3	99	1,795	

LAND DESCRIPTION

TOTAL OB/XF 3,442

LN	USE CODE	CLS	LAND USE DESCRIPTION	CAP	RD	LOC ZONE	FRONT	DEPTH	TOT LND UTS	UNIT TYPE	DT	DPTH FACT	% COND	TOT ADJ	UNIT PRICE	ADJ UNIT PRICE	LAND VALUE	OTHER ADJUSTMENTS AND NOTES	YEAR	DENSITY	DECL	FRZ	YR	CONSRV
1	000100	C	RES	100		OR	0.00	0.00	7.00	AC		1.00	1.00	1.00	19,500.00	19,500.00	136,500							

REVIEW DATE 03/07/2023 BY DJ Total Acres: 7.00 Total Land Value: 136,500 Market: 0 Agricultural: 0 Common: 136,500 PRINTED 07/30/2025 BY SYS