PT S1/2 OF SW1/4 OF
SEC 3-1N-23E IN OR 2190/1411
ESMT IN OR 2260/796

HIGHAM KENT F JR &/BEIDEMAN MICHELE
75153 RAVENWOOD DR
YULEE, FL 32097

2025

03-1N-23-0000-0008-0140

NASSAU COUNTY PROPERTY

BUILDING CHARACTERISTICS

ELEMENT	CD	CONSTRUCTION
Exterior Wall	10	ABOVE AVG 100
Roof Structur	03	GABLE/HIP 100
Roof Cover	03	COMP SHNGL 100
Interior Wall	05	DRYWALL 100
Interior Floo	08	SHT VINYL 100
Air Condition	03	CENTRAL 100
Heating Type	04	AIR DUCTED 100
Bedrooms		4 100
Bathrooms		2.5 100
Frame	02	WOOD FRAME 100
Stories	0	0 100
Units		0 100
Occupancy	00	NONE 100
Quality	05	Quality Level 05

DOR CODE	0100	SINGLE FAMILY	
MAP NUM		MKT AREA	09
NEIGHBORHOOD/LOC	9001.00		

AREA TYPE	TOTAL GROSS AREA	PCT OF BASE	YEAR	TOT ADJ AREA	SUBAREA MARKET VALUE
BAS	1,271	100	2019	1,271	179,700
FGR	755	55	2019	415	58,675
FOP	920	30	2019	276	39,023
FUS	1,080	100	2019	1,080	152,696
STR	52	10	2019	5	707
TOTALS	4,078			3,047	430,799

MARKET ADJUSTMENTS

TYPE	MDL	EFF. AREA	TOT ADJ PTS	EFF. BASE RATE	REPL. COST NEW	AYB	EYB	ECON	FNCT		NORM	% COND
0900	01	3,047	109.2960	144.27	439,591	2019	2019	0	0	0	2.00	98.00

1 SNGL FAM – 0% - 0 Heated Area: 2351 HX Base Yr

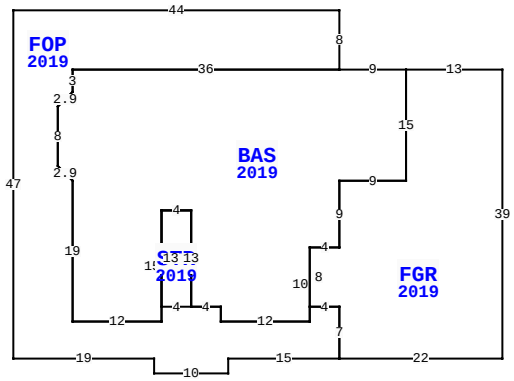

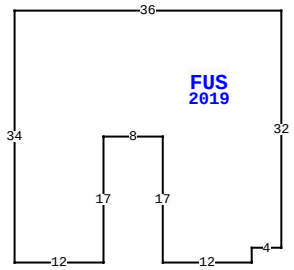

2850 SR 2, HILLIARD

BLD DATE		LGL DATE	
XF DATE		LAND DATE	05/09/2025 MLU
INC DATE		AG DATE	

VALUATION SUMMARY

VALUATION BY	STANDARD
Tax Group: 6	Tax Dist:
BUILDING MARKET VALUE	430,799
TOTAL MARKET OB/XF VALUE	7,073
TOTAL LAND VALUE - MARKET	93,600
TOTAL MARKET VALUE	531,472
SOH/AGL Deduction	54,894
ASSESSED VALUE	476,578
TOTAL EXEMPTION VALUE	0
BASE TAXABLE VALUE	476,578
TOTAL JUST VALUE	531,472
NCON VALUE	0
INCOME VALUE	
PREVIOUS YEAR MKT VALUE	508,382

PERMIT NUM	DESCRIPTION	AMT	ISSUED
19005219	CO ISSUED	0	05/20/2019
19003862	GARAGE	31,187	04/17/2019
18010424	NEW CONSTR	335,782	10/15/2018

SALES DATA

OFF RECORD Number	DATE	TYPE INST	Q / U	V / I	RSN CD	SALE PRICE
2190/1411	3/27/2018	QC	U	V	11	100
GRANTOR: HIGHAM KENT F &						
GRANTEE: HIGHAM KENT F JR &						
2131/1269	6/30/2017	WD	Q	V	01	40,000
GRANTOR: MCCLELLAN DARRELL						
GRANTEE: HIGHAM KENT F						

BUILDING NOTES

BUILDING DIMENSIONS

FGR=[YR=2019] W13 BAS=[YR=2019] W9 FOP=[YR=2019] N8 W44 S47 E19 S2 E10 N2 E15 N7 W4 S2 W12 N2 W4 STR=[YR=2019] W4 N13 E4 S13$ N13 W4 S15 W12 N19 U2 L2 N8 U2 R2 N3 E36$ W36 S3 D2 L2 S8 R2 D2 S19 E12 N15 E4 S13 E4 S2 E12 N10 E4 N9 E9 N15$ S15 W9 S9 W4 S8 E4 S7 E22 N39$ PTR= E20 FUS=[YR=2019] E36 S32 W4 S2 W12 N17W8 S17 W12 N34$ W20$.

EXTRA FEATURES

LN	OB/XF CODE	DESCRIPTION	BLD	CAP	L	W	UNITS	UT	Adj R	ADJ UNIT PRICE	ORIG COND	YEAR ON	YEAR ACTUAL	Q	% COND	OB/XF MKT VALUE	NOTES
1	0810	CONCRETE A	0	0	0	0	500.00	SF	6.50	6.50	100	2019	2019	3	97	3,153	
2	0504	FP-ELECTRI	0	0	0	0	1.00	UT	2,000.00	2,000.00	100	2019	2019	3	98	1,960	
3	0504	FP-ELECTRI	0	0	0	0	1.00	UT	2,000.00	2,000.00	100	2019	2019	3	98	1,960	

LAND DESCRIPTION

TOTAL OB/XF 7,073

LN	USE CODE	CLS	LAND USE DESCRIPTION	CAP	RD	LOC ZONE	FRONT	DEPTH	TOT LND UTS	UNIT TYPE	DT	DPTH FACT	% COND	TOT ADJ	UNIT PRICE	ADJ UNIT PRICE	LAND VALUE	OTHER ADJUSTMENTS AND NOTES	YEAR	DENSITY	DECL	FRZ	YR	CONSRV
1	000100	C	RES	0		OR	0.00	0.00	8.00	AC		1.00	1.00	0.60	19,500.00	11,700.00	93,600							

REVIEW DATE 05/20/2024 BY WWA Total Acres: 8.00 Total Land Value: 93,600 Market: 0 Agricultural: 0 Common: 93,600 PRINTED 07/30/2025 BY SYS