PT OF SW1/4
IN OR 1444/1161
ESMT OR 1453/619

EDWARDS CHARLES L & ANGELA LEE/
14080 UNCLE CHARLIES CIR
HILLIARD, FL 32046

2025

03-1N-23-0000-0008-0080

NASSAU COUNTY PROPERTY

BUILDING CHARACTERISTICS

ELEMENT	CD	CONSTRUCTION
Exterior Wall	20	FACE BRICK 80
Exterior Wall	05	AVERAGE 20
Roof Structur	08	IRREGULAR 100
Roof Cover	12	MODULAR MT 100
Interior Wall	05	DRYWALL 100
Interior Floo	14	CARPET 70
Interior Floo	11	CLAY TILE 30
Air Condition	03	CENTRAL 100
Heating Type	04	AIR DUCTED 100
Bedrooms		4 100
Bathrooms		3 100
Frame	02	WOOD FRAME 100
Stories	2.	2. 100
Units		0 100
Occupancy	00	NONE 100
Quality	02	Quality Level 02
DOR CODE	6000	PASTURELAND 1
MAP NUM		MKT AREA 09
NEIGHBORHOOD/LOC	9001.00	

AREA TYPE	TOTAL GROSS AREA	PCT OF BASE	YEAR	TOT ADJ AREA	SUBAREA MARKET VALUE
BAS	2,134	100	2007	2,134	240,676
FGR	506	55	2007	278	31,353
FOP	210	30	2007	63	7,105
FOP	272	30	2007	82	9,248
FUS	1,252	100	2007	1,252	141,202
UST	114	45	2007	51	5,752
TOTALS	4,488			3,860	435,336

MARKET ADJUSTMENTS

TYPE	MDL	EFF. AREA	TOT ADJ PTS	EFF. BASE RATE	REPL. COST NEW	AYB	EYB	ECON	FNCT		NORM	% COND
0900	01	3,860	96.8715	127.87	493,578	2007	2007	0	0	0	11.80	88.20

1 SNGL FAM – 100% - 2008 Heated Area: 3386 HX Base Yr 2008

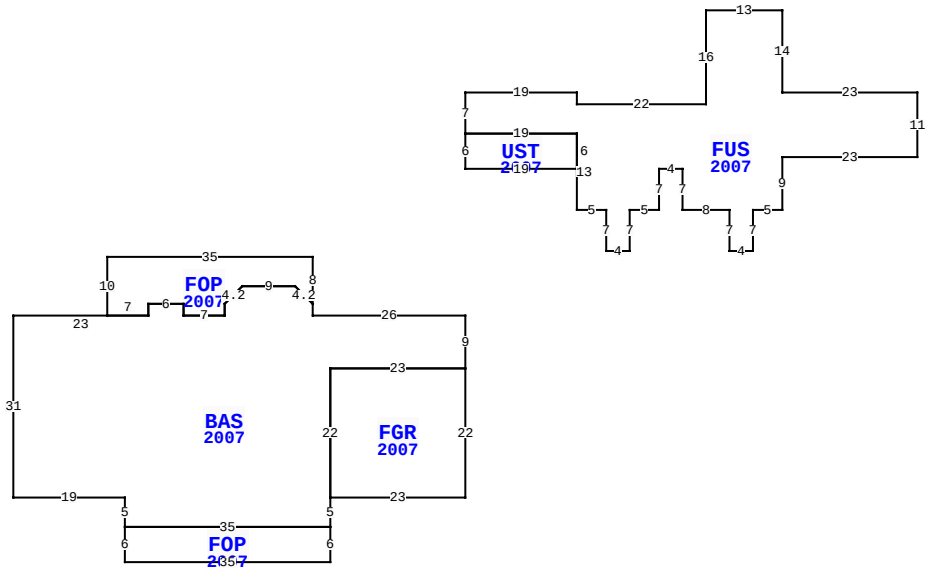

14080 UNCLE CHARLIES CIR, HILLIARD

BLD DATE		LGL DATE	
XF DATE		LAND DATE	10/29/2024 KBA
INC DATE		AG DATE	10/29/2024 KBA

VALUATION SUMMARY

VALUATION BY		STANDARD
Tax Group: 6	Tax Dist:	
BUILDING MARKET VALUE		435,336
TOTAL MARKET OB/XF VALUE		23,592
TOTAL LAND VALUE - MARKET		160,000
TOTAL MARKET VALUE		549,668
SOH/AGL Deduction		281,945
ASSESSED VALUE		267,723
TOTAL EXEMPTION VALUE	HX HB	50,722
BASE TAXABLE VALUE		217,001
TOTAL JUST VALUE		618,928
NCON VALUE		0
INCOME VALUE		
PREVIOUS YEAR MKT VALUE		553,226

PERMIT NUM	DESCRIPTION	AMT	ISSUED
22017510	REPAIR/RRF	35,000	11/28/2022
M12289	MECH OTHER	0	12/01/2006
B18717	CO ISSUED	287,826	10/01/2006
E18250	ELEC OTHER	4,000	10/01/2006
B18717	NEW CONSTR	287,826	10/01/2006
P11662	OTHER	0	10/01/2006

SALES DATA

OFF RECORD Number	DATE	TYPE INST	Q / U	V / I	RSN CD	SALE PRICE
1444/1161	9/14/2006	WD	Q	V		100,000

GRANTOR: RYALS LINDA
GRANTEE: EDWARDS CHARLES L &

BUILDING NOTES

BUILDING DIMENSIONS

BAS=[YR=2007] W26 N2 FOP=[YR=2007] N8 W35 S10 E7 N2 E6 S2 E7 N2 U3 R3 E9 D3 R3 $ L3 U3 W9 L3 D3 S2 W7 N2 W6 S2 W23 S31 E19 S5 FOP=[YR=2007] S6 E35 N6 W35$ E35 N5 FGR=[YR=2007] E23 N22 W23 S22$ N22 E23 N9$ PTR=N25 UST=[YR=2007] N6 FUS=[YR=2007] N7 E19 S2 E22 N16 E13 S14 E23 S11 W23 S9 W5 S7 W4 N7 W8 N7 W4 S7 W5 S7 W4 N7 W5 N13 W19$ E19 S6 W19$ S25$.

EXTRA FEATURES

LN	OB/XF CODE	DESCRIPTION	BLD	CAP	L	W	UNITS	UT	Adj R	ADJ UNIT PRICE	ORIG COND	YEAR ON	YEAR ACTUAL	Q	% COND	OB/XF MKT VALUE	NOTES
1	0504	FP-ELECTRI	0	100	0	0	1.00	UT	2,000.00	2,000.00	100	2007	2007	3	90	1,800	
2	0940	SHEDS/PORT	0	100	16	11	176.00	SF	30.00	30.00	100	2007	2007	3	27	1,426	
3	0812	CONCRETE C	0	100	0	0	2,697.00	SF	4.00	4.00	100	2007	2007	3	87	9,386	
4	0825	BRICK	0	100	0	0	27.00	SF	12.50	12.50	100	2007	2007	3	96	324	
5	0680	POLE SHED	0	100	20	16	320.00	SF	10.00	10.00	100	2017	2017	3	81	2,592	
6	0510	GARAGE WD-	0	100	24	20	480.00	SF	35.00	35.00	100	2008	2008	3	48	8,064	

LAND DESCRIPTION

TOTAL OB/XF 23,592

LN	USE CODE	CLS	LAND USE DESCRIPTION	CAP	RD	LOC ZONE	FRONT	DEPTH	TOT LND UTS	UNIT TYPE	DT	DPTH FACT	% COND	TOT ADJ	UNIT PRICE	ADJ UNIT PRICE	LAND VALUE	OTHER ADJUSTMENTS AND NOTES	YEAR	DENSITY	DECL	FRZ	YR	CONSRV
1	005000	C	AGRICULTURAL	100	0004	OR	0.00	0.00	3.00	AC		1.00	1.00	1.00	30,000.00	30,000.00	90,000							
2	006005	A	PASTURE - GR	0		OR	0.00	0.00	2.00	AC		1.00	1.00	1.00	370.00	370.00	740							
3	009910	M	MARKET VALUE	0		OR	0.00	0.00	2.00	AC		1.00	1.00	1.00	35,000.00	35,000.00	70,000							

REVIEW DATE 02/17/2023 BY WWX Total Acres: 5.00 Total Land Value: 90,740 Market: 70,000 Agricultural: 740 Common: 90,000 PRINTED 07/30/2025 BY SYS