LOT 51
LITTLE DUNES PB 5/340

BOHNER ROBERT J JR & LESLIE G
84 NORRISTOWN ROAD
BLUE BELL, PA 19422

2025

02-6N-29-DCLO-0051-0000

NASSAU COUNTY PROPERTY

BUILDING CHARACTERISTICS

ELEMENT	CD	CONSTRUCTION
Exterior Wall	10	ABOVE AVG 100
Roof Structur	03	GABLE/HIP 100
Roof Cover	03	COMP SHNGL 100
Interior Wall	05	DRYWALL 100
Interior Floo	12	HARDWOOD 50
Interior Floo	14	CARPET 50
Air Condition	03	CENTRAL 100
Heating Type	04	AIR DUCTED 100
Bedrooms		3 100
Bathrooms		3 100
Frame	02	WOOD FRAME 100
Stories	2.	2. 100
Units		0 100
Quality	05	Quality Level 05
DOR CODE	0100	SINGLE FAMILY
MAP NUM		MKT AREA 10
NEIGHBORHOOD/LOC	10003.010	

AREA TYPE	TOTAL GROSS AREA	PCT OF BASE	YEAR	TOT ADJ AREA	SUBAREA MARKET VALUE
BAS	1,441	100	1993	1,441	322,026
FOP	24	30	1993	7	1,564
FSP	36	40	1993	14	3,129
FST	18	55	1993	10	2,235
FUS	542	100	1993	542	121,123
UDC	273	25	1993	68	15,197
UOP	80	20	1993	16	3,575
USP	147	30	1993	44	9,832
UST	30	45	1993	14	3,129
UST	30	45	1993	14	3,129
TOTALS	2,621			2,170	484,940

MARKET ADJUSTMENTS

TYPE	MDL	EFF. AREA	TOT ADJ PTS	EFF. BASE RATE	REPL. COST NEW	AYB	EYB	ECON	FNCT		NORM	% COND
0500	11	2,170	151.2728	239.01	518,652	1993	2010	0	0	0	6.50	93.50

1 SFR CUST – 0% - 2024 Heated Area: 1983 HX Base Yr

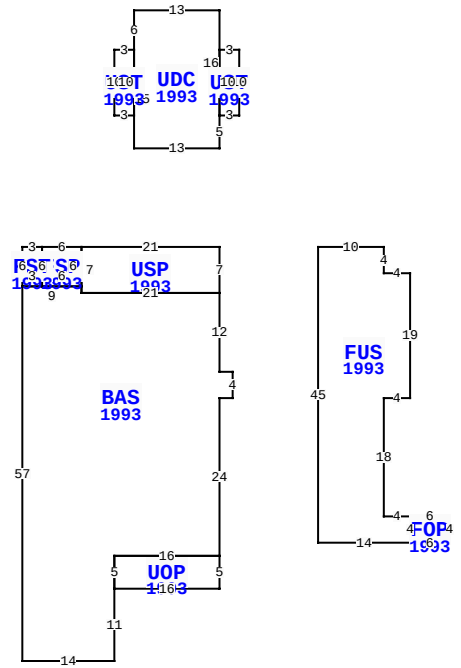

51 LITTLE DUNES CIR, FERNANDINA BEACH

BLD DATE		LGL DATE	
XF DATE		LAND DATE	05/08/2025 MLU
INC DATE		AG DATE	

VALUATION SUMMARY

VALUATION BY	STANDARD
Tax Group: 5	Tax Dist:
BUILDING MARKET VALUE	484,940
TOTAL MARKET OB/XF VALUE	6,093
TOTAL LAND VALUE - MARKET	450,000
TOTAL MARKET VALUE	941,033
SOH/AGL Deduction	40,057
ASSESSED VALUE	900,976
TOTAL EXEMPTION VALUE	0
BASE TAXABLE VALUE	900,976
TOTAL JUST VALUE	941,033
NCON VALUE	0
INCOME VALUE	
PREVIOUS YEAR MKT VALUE	819,069

PERMIT NUM	DESCRIPTION	AMT	ISSUED
B240006738	REMODEL	120,000	06/06/2024

SALES DATA

OFF RECORD Number	DATE	TYPE INST	Q U	V I	RSN CD	SALE PRICE
2674/393	10/17/2023	WD	Q	I	01	1,000,000
GRANTOR: LIMONE JOSEPH P						
GRANTEE: BOHNER ROBERT J JR						
2182/1889	3/12/2018	WD	Q	I	01	620,000
GRANTOR: DALY CHARLES U & CHRI						
GRANTEE: LIMONE JOSEPH P						

BUILDING NOTES

BUILDING DIMENSIONS

USP=[YR=1993] W21 FSP=[YR=1993] W6 FST=[YR=1993] W3 S6 BAS=[YR=1993] S57 E14 N11 UOP=[YR=1993] E16 N5 W16 S5$N5 E16 N24 E2 N4 W2 N12 W21 N1W9$ E3 N6$ S6 E6 N6$ S7 E21 N7$ PTR=E15 FUS=[YR=1993] E10 S4 E4 S19 W4 S18 E4 FOP=[YR=1993] E6S4 W6 N4$ S4 W14 N45$ W15$ PTR= N15 UDC=[YR=1993] N5 UST=[YR=1993] E3 N10 W3 S10$ N16 W13 S6 UST=[YR=1993] W3 S10 E3 N10$ S15 E13$ S15$.

EXTRA FEATURES

LN	OB/XF CODE	DESCRIPTION	BLD	CAP	L	W	UNITS	UT	Adj R	ADJ UNIT PRICE	ORIG COND	YEAR ON	YEAR ACTUAL	Q	% COND	OB/XF MKT VALUE	NOTES
1	0504	FP-ELECTRI	0	0	0	0	1.00	UT	2,000.00	2,000.00	100	1993	1993	3	72	1,440	
2	0825	BRICK	0	0	0	0	256.00	SF	12.50	12.50	100	1993	1993	3	88	2,816	
3	0810	CONCRETE A	0	0	0	0	410.00	SF	6.50	6.50	100	1993	1993	3	64	1,706	
4	0441	STK FNC 4'	0	0	0	0	101.00	LF	6.50	6.50	100	1993	1993	3	20	131	

LAND DESCRIPTION

TOTAL OB/XF 6,093

LN	USE CODE	CLS	LAND USE DESCRIPTION	CAP	RD	LOC ZONE	FRONT	DEPTH	TOT LND UTS	UNIT TYPE	DT	DPTH FACT	% COND	TOT ADJ	UNIT PRICE	ADJ UNIT PRICE	LAND VALUE	OTHER ADJUSTMENTS AND NOTES	YEAR	DENSITY	DECL	FRZ	YR	CONSRV
1	000100	C	RES	0		PUD	0.00	0.00	1.00	LT		1.00	1.00	1.00	450,000.00	450,000.00	450,000							

REVIEW DATE 10/14/2024 BY DJ Total Acres: 0.00 Total Land Value: 450,000 Market: 0 Agricultural: 0 Common: 450,000 PRINTED 07/30/2025 BY SYS