LOT 41
LITTLE DUNES PHASE 5 PB 6/205

WIGMORE CHRISTOPHER
POOL FARM, STRATTON AUDLEY
OXFORD SHIRE, OX27-9AJ

2025

02-6N-29-DCLO-0041-0000

BUILDING CHARACTERISTICS

ELEMENT	CD	CONSTRUCTION
Exterior Wall	10	ABOVE AVG 100
Roof Structur	03	GABLE/HIP 100
Roof Cover	03	COMP SHNGL 100
Interior Wall	05	DRYWALL 100
Interior Floo	12	HARDWOOD 50
Interior Floo	14	CARPET 50
Air Condition	03	CENTRAL 100
Heating Type	04	AIR DUCTED 100
Bedrooms		3 100
Bathrooms		3 100
Frame	02	WOOD FRAME 100
Stories	2.	2. 100
Units		0 100
Quality	05	Quality Level 05
DOR CODE	0100	SINGLE FAMILY
MAP NUM		MKT AREA 10
NEIGHBORHOOD/LOC	10003.010	

AREA TYPE	TOTAL GROSS AREA	PCT OF BASE	YEAR	TOT ADJ AREA	SUBAREA MARKET VALUE
BAS	1,305	100	2001	1,305	267,145
FOP	102	30	2001	31	6,346
FOP	107	30	2001	32	6,550
FSP	110	40	2001	44	9,007
FUS	1,234	100	2001	1,234	252,610
UDC	273	25	2001	68	13,920
UOP	8	20	2001	2	409
UOP	10	20	2001	2	409
UST	15	45	2001	7	1,433
UST	50	45	2001	22	4,503
TOTALS	3,214			2,747	562,335

MARKET ADJUSTMENTS

TYPE	MDL	EFF. AREA	TOT ADJ PTS	EFF. BASE RATE	REPL. COST NEW	AYB	EYB	ECON	FNCT		NORM	% COND
0500	11	2,747	145.5744	230.01	631,837	2001	2001	0	0	0	11.00	89.00

1 SFR CUST – 0% - 0 Heated Area: 2539 HX Base Yr

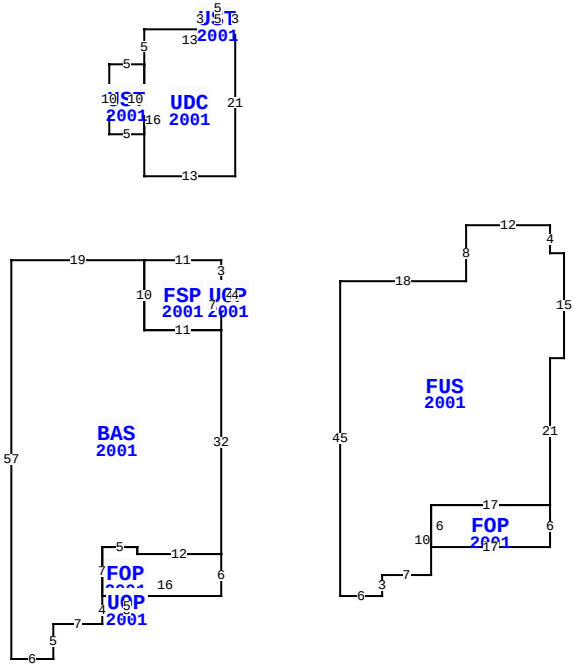

41 LITTLE DUNES CIR, FERNANDINA BEACH

BLD DATE		LGL DATE	
XF DATE		LAND DATE	05/08/2025 MLU
INC DATE		AG DATE	

NASSAU COUNTY PROPERTY

PAGE 1 of 1 5

VALUATION SUMMARY

VALUATION BY	STANDARD
Tax Group: 5	Tax Dist:
BUILDING MARKET VALUE	562,335
TOTAL MARKET OB/XF VALUE	6,361
TOTAL LAND VALUE - MARKET	450,000
TOTAL MARKET VALUE	1,018,696
SOH/AGL Deduction	208,663
ASSESSED VALUE	810,033
TOTAL EXEMPTION VALUE	0
BASE TAXABLE VALUE	810,033
TOTAL JUST VALUE	1,018,696
NCON VALUE	0
INCOME VALUE	
PREVIOUS YEAR MKT VALUE	893,257

PERMIT NUM	DESCRIPTION	AMT	ISSUED
M015150	H/AC	0	07/01/2001
E018128	NEW CONSTR	0	06/01/2001

SALES DATA

OFF RECORD Number	DATE	TYPE INST	Q / U	V / I	RSN CD	SALE PRICE
2694/181	1/17/2024	QC	U	I	11	100
GRANTOR: NELLES AMANDA						
GRANTEE: WIGMORE CHRISTOPHER						
2337/1322	2/03/2020	QC	U	I	11	100
GRANTOR: WIGMORE CATHERINE						
GRANTEE: WIGMORE CHRISTOPHER						

BUILDING NOTES

BUILDING DIMENSIONS

UOP=[YR=2001] W2 FSP=[YR=2001] N3 W11 BAS=[YR=2001] W19 S57 E6 N5 E7 N4 FOP=[YR=2001] E1 UOP=[YR=2001] S2 E5 N2 W5 $ E16 N6 W12 N1 W5 S7 $ N7 E5 S1 E12 N32 W11 N10 $ S10 E11 N7 $ S4 E2 N4 $ PTR= E15 FUS=[YR=2001] E18 N8 E12 S4 E2 S15 W2 S21 FOP=[YR=2001] S6 W17 N6 E17 $ W17 S10 W7 S3 W6 N45 $ W15 $ PTR= N15 UDC=[YR=2001] N21 UST=[YR=2001] N3 W5 S3 E5 $ W13 S5 UST=[YR=2001] W5 S10 E5 N10 $ S16 E13 $ S15 $.

EXTRA FEATURES

LN	OB/XF CODE	DESCRIPTION	BLD	CAP	L	W	UNITS	UT	Adj R	ADJ UNIT PRICE	ORIG COND	YEAR ON	YEAR ACTUAL	Q	% COND	OB/XF MKT VALUE	NOTES
1	0504	FP-ELECTRI	0	0	0	0	1.00	UT	2,000.00	2,000.00	100	2001	2001	3	84	1,680	
2	0825	BRICK	0	0	0	0	227.00	SF	12.50	12.50	100	2001	2001	3	94	2,667	
3	0810	CONCRETE A	0	0	0	0	298.00	SF	6.50	6.50	100	2001	2001	3	79	1,530	
4	0441	STK FNC 4'	0	0	0	0	52.00	LF	6.50	6.50	100	2001	2001	3	20	68	
5	0441	STK FNC 4'	0	0	0	0	35.00	LF	6.50	6.50	100	2001	2001	3	20	46	
6	0810	CONCRETE A	0	0	12	6	72.00	SF	6.50	6.50	100	2001	2001	3	79	370	

LAND DESCRIPTION

TOTAL OB/XF 6,361

LN	USE CODE	CLS	LAND USE DESCRIPTION	CAP	RD	LOC ZONE	FRONT	DEPTH	TOT LND UTS	UNIT TYPE	DT	DPTH FACT	% COND	TOT ADJ	UNIT PRICE	ADJ UNIT PRICE	LAND VALUE	OTHER ADJUSTMENTS AND NOTES	YEAR	DENSITY	DECL	FRZ	YR	CONSRV
1	000140	C	RES GOLF	0		PUD	0.00	0.00	1.00	LT		1.00	1.00	1.00	450,000.00	450,000.00	450,000							

REVIEW DATE 12/03/2019 BY DJA Total Acres: 0.00 Total Land Value: 450,000 Market: 0 Agricultural: 0 Common: 450,000 PRINTED 07/30/2025 BY SYS