LOT 25
IN OR 1811/649
LITTLE DUNES PB 5/340

BUCHER CONCETTA REV TRUST/BUCHER CONCETTA TRUSTEE
2716 ASHFORD RD NE
BROOKHAVEN, GA 30319

2025

02-6N-29-DCLO-0025-0000

BUILDING CHARACTERISTICS

ELEMENT	CD	CONSTRUCTION
Exterior Wall	10	ABOVE AVG 100
Roof Structur	03	GABLE/HIP 100
Roof Cover	03	COMP SHNGL 100
Interior Wall	05	DRYWALL 100
Interior Floo	12	HARDWOOD 60
Interior Floo	14	CARPET 40
Air Condition	03	CENTRAL 100
Heating Type	04	AIR DUCTED 100
Bedrooms		3 100
Bathrooms		3 100
Frame	02	WOOD FRAME 100
Stories	2.	2. 100
Units		0 100
Quality	05	Quality Level 05

DOR CODE 0100 SINGLE FAMILY
MAP NUM | MKT AREA 10
NEIGHBORHOOD/LOC 10003.010

AREA TYPE	TOTAL GROSS AREA	PCT OF BASE	YEAR	TOT ADJ AREA	SUBAREA MARKET VALUE
BAS	1,195	100	1996	1,195	266,430
BAS	30	100	2024	30	6,688
BAS	110	100	2024	110	24,525
FOP	102	30	1996	31	6,911
FUS	890	100	1993	890	198,429
FUS	328	100	2008	328	73,129
FUS	20	100	2024	20	4,459
UDC	260	25	1996	65	14,492
UST	45	45	1996	20	4,459
TOTALS	2,980			2,689	599,523

MARKET ADJUSTMENTS

TYPE	MDL	EFF. AREA	TOT ADJ PTS	EFF. BASE RATE	REPL. COST NEW	AYB	EYB	ECON	FNCT		NORM	% COND
0500	11	2,689	146.2272	231.04	621,267	1996	2016	0	0	0	3.50	96.50

1 SFR CUST – 0% - 0 Heated Area: 2573 HX Base Yr

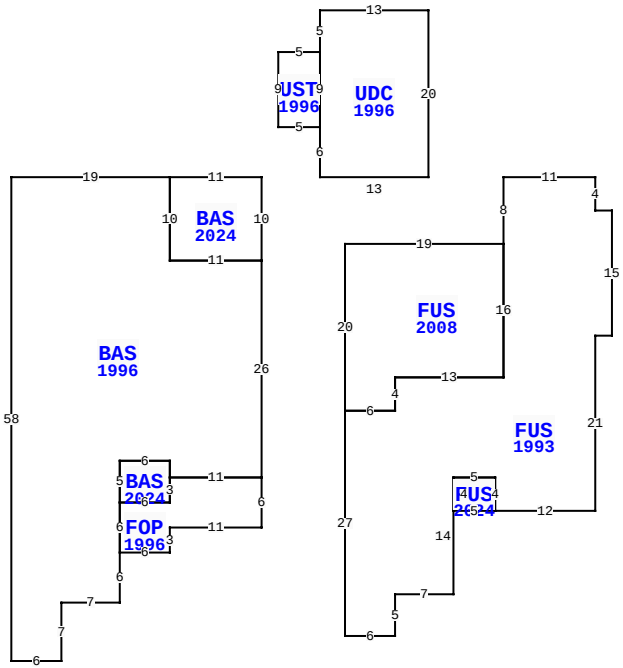

25 LITTLE DUNES CIR, FERNANDINA BEACH

BLD DATE		LGL DATE	
XF DATE		LAND DATE	05/08/2025 MLU
INC DATE		AG DATE	

NASSAU COUNTY PROPERTY

PAGE 1 of 1 5

VALUATION SUMMARY

VALUATION BY	STANDARD
Tax Group: 5	Tax Dist:
BUILDING MARKET VALUE	599,523
TOTAL MARKET OB/XF VALUE	12,371
TOTAL LAND VALUE - MARKET	450,000
TOTAL MARKET VALUE	1,061,894
SOH/AGL Deduction	195,879
ASSESSED VALUE	866,015
TOTAL EXEMPTION VALUE	0
BASE TAXABLE VALUE	866,015
TOTAL JUST VALUE	1,061,894
NCON VALUE	0
INCOME VALUE	
PREVIOUS YEAR MKT VALUE	934,577

PERMIT NUM	DESCRIPTION	AMT	ISSUED
20216958	REMODEL	160,000	08/01/2021
B20636	ADDITION	36,687	10/01/2007
B9602965	NEW CONSTR	68,802	05/01/1996
B9602966	GARAGE	4,692	05/01/1996

SALES DATA

OFF RECORD Number	DATE	TYPE INST	Q U	V I	RSN CD	SALE PRICE
1811/0649	7/31/2012	WD	U	I	30	100
GRANTOR: BUCHER CONCETTA						
GRANTEE: BUCHER CONCETTA TRU						
1807/0911	7/31/2012	WD	U	I	30	100
GRANTOR: BUCHER KIM L & CONCET						
GRANTEE: BUCHER CONCETTA						

BUILDING NOTES

BUILDING DIMENSIONS

BAS=[YR=1996;ORIG=-11,0] W19 S58 E6 N7 E7 N6 N6 N5 E6 S2 E11 N26 W11 N10 $
FUS=[YR=1993;ORIG=29,8] N8 E11 S4 E2 S15 W2 S21 W12 N4 W5 S14 W7 S5 W6 N27 E6 N4 E13 N16 $
FUS=[YR=2008;ORIG=10,28] N20 E19 S16 W13 S4 W6 $
UDC=[YR=1996;ORIG=7,0] N6 N9 N5 E13 S20 W13 $
BAS=[YR=2024;ORIG=-11,10] E11 N10 W11 S10 $
FOP=[YR=1996;ORIG=-17,45] E6 N3 E11 N6 W11 S3 W6 S6 $
UST=[YR=1996;ORIG=7,-6] W5 N9 E5 S9 $
BAS=[YR=2024;ORIG=-17,34] E6 S2 S3 W6 N5 $
PTR=[ORIG=0,0] E15 W15 $
PTR=[ORIG=0,0] N10 S10 $

EXTRA FEATURES

LN	OB/XF CODE	DESCRIPTION	BLD	CAP	L	W	UNITS	UT	Adj R	ADJ UNIT PRICE	ORIG COND	YEAR ON	YEAR ACTUAL	Q	% COND	OB/XF MKT VALUE	NOTES
1	0504	FP-ELECTRI	0	0	0	0	1.00	UT	2,000.00	2,000.00	100	1996	1996	3	77	1,540	
2	0810	CONCRETE A	0	0	0	0	400.00	SF	6.50	6.50	100	1996	1996	3	70	1,820	
3	1075	TRELLIS G	0	0	5	2	10.00	SF	35.00	35.00	100	1996	1996	3	23	81	
4	0825	BRICK	0	0	0	0	169.00	SF	12.50	12.50	100	1996	1996	3	91	1,922	
5	0857	SANDSTONE/	0	0	0	0	438.00	SF	16.00	16.00	100	2024	2023		100	7,008	

LAND DESCRIPTION

TOTAL OB/XF 12,371

LN	USE CODE	CLS	LAND USE DESCRIPTION	CAP	RD	LOC ZONE	FRONT	DEPTH	TOT LND UTS	UNIT TYPE	DT	DPTH FACT	% COND	TOT ADJ	UNIT PRICE	ADJ UNIT PRICE	LAND VALUE	OTHER ADJUSTMENTS AND NOTES	YEAR	DENSITY	DECL	FRZ	YR	CONSRV
1	000140	C	RES GOLF	0		PUD	0.00	0.00	1.00	LT		1.00	1.00	1.00	450,000.00	450,000.00	450,000							

REVIEW DATE 02/23/2024 BY TW Total Acres: 0.00 Total Land Value: 450,000 Market: 0 Agricultural: 0 Common: 450,000 PRINTED 07/30/2025 BY SYS