LOT 17
LITTLE DUNES #4 PB 6/146

SITES PAUL S & NORA P
470 CAMERON VALLEY CT
ATLANTA, GA 30328

2025

02-6N-29-DCLO-0017-0000

BUILDING CHARACTERISTICS

ELEMENT	CD	CONSTRUCTION
Exterior Wall	10	ABOVE AVG 100
Roof Structur	03	GABLE/HIP 100
Roof Cover	03	COMP SHNGL 100
Interior Wall	05	DRYWALL 100
Interior Floo	12	HARDWOOD 50
Interior Floo	14	CARPET 50
Air Condition	03	CENTRAL 100
Heating Type	04	AIR DUCTED 100
Bedrooms		3 100
Bathrooms		3 100
Frame	02	WOOD FRAME 100
Stories	2.	2. 100
Units		0 100
Quality	05	Quality Level 05
DOR CODE	0100	SINGLE FAMILY
MAP NUM		MKT AREA 10
NEIGHBORHOOD/LOC	10003.010	

AREA TYPE	TOTAL GROSS AREA	PCT OF BASE	YEAR	TOT ADJ AREA	SUBAREA MARKET VALUE
BAS	1,198	100	2000	1,198	251,179
FOP	112	30	2000	34	7,129
FSP	110	40	2000	44	9,225
FUS	910	100	2000	910	190,795
PTO	72	5	2000	4	839
UCP	273	20	2000	55	11,532
UOP	6	20	2000	1	210
UOP	10	20	2000	2	419
UST	20	45	2000	9	1,887
UST	40	45	2000	18	3,774
TOTALS	2,751			2,275	476,988

MARKET ADJUSTMENTS

TYPE	MDL	EFF. AREA	TOT ADJ PTS	EFF. BASE RATE	REPL. COST NEW	AYB	EYB	ECON	FNCT		NORM	% COND
0500	11	2,275	149.9400	236.91	538,970	2000	2000	0	0	0	11.50	88.50

1 SFR CUST – 0% - 0 Heated Area: 2108 HX Base Yr

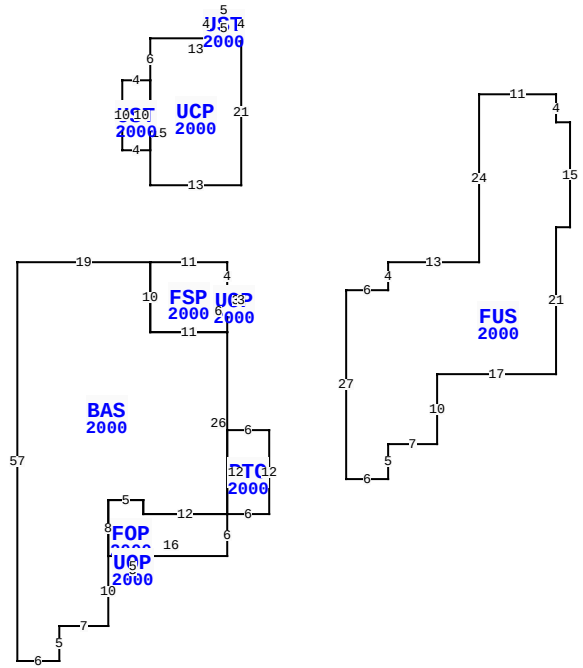

17 LITTLE DUNES CIR, FERNANDINA BEACH

BLD DATE		LGL DATE	
XF DATE		LAND DATE	05/08/2025 MLU
INC DATE		AG DATE	

NASSAU COUNTY PROPERTY

PAGE 1 of 1 5

VALUATION SUMMARY

VALUATION BY	STANDARD
Tax Group: 5	Tax Dist:
BUILDING MARKET VALUE	476,988
TOTAL MARKET OB/XF VALUE	7,927
TOTAL LAND VALUE - MARKET	450,000
TOTAL MARKET VALUE	934,915
SOH/AGL Deduction	196,187
ASSESSED VALUE	738,728
TOTAL EXEMPTION VALUE	0
BASE TAXABLE VALUE	738,728
TOTAL JUST VALUE	934,915
NCON VALUE	0
INCOME VALUE	
PREVIOUS YEAR MKT VALUE	813,451

PERMIT NUM	DESCRIPTION	AMT	ISSUED
B007215	CARPORT	5,000	06/01/2000
B006776	NEW CONSTR	150,000	02/01/2000

SALES DATA

OFF RECORD Number	DATE	TYPE INST	Q U	V I	RSN CD	SALE PRICE
2302/0607	8/23/2019	WD	Q	I	01	650,000
GRANTOR: DUCHARME JAMES W & JA						
GRANTEE: SITES PAUL S & NORA						
2106/0949	3/13/2017	WD	Q	I	01	645,000
GRANTOR: MILHOUS CHRISTOPHER &						
GRANTEE: DUCHARME JAMES W &						

BUILDING NOTES

BUILDING DIMENSIONS

UOP=[YR=2000] W2 FSP=[YR=2000] N4 W11 BAS=[YR=2000] W19 S57 E6 N5 E7 N10 FOP=[YR=2000] E1 UOP=[YR=2000] S2 E5 N2 W5 $ E16 N6 PTO=[YR=2000] E6 N12 W6 S12 $ W12 N2 W5 S8 $ N8 E5 S2 E12 N26 W11 N10 $ S10 E11 N6 $ S3 E2 N3 $ PTR= N15 UCP=[YR=2000] N21 UST=[YR=2000] N4 W5 S4 E5 $ W13 S6 UST=[YR=2000] W4 S10 E4 N10 $ S15 E13 $ S15 $ PTR= E15 FUS=[YR=2000] E6 N4 E13 N24 E11 S4 E2 S15 W2 S21 W17 S10 W7 S5 W6 N27 $ W15 $.

EXTRA FEATURES

LN	OB/XF CODE	DESCRIPTION	BLD	CAP	L	W	UNITS	UT	Adj R	ADJ UNIT PRICE	ORIG COND	YEAR ON	YEAR ACTUAL	Q	% COND	OB/XF MKT VALUE	NOTES
1	0504	FP-ELECTRI	0	0	0	0	1.00	UT	2,000.00	2,000.00	100	2000	2000	3	83	1,660	
2	0810	CONCRETE A	0	0	0	0	338.00	SF	6.50	6.50	100	2000	2000	3	77	1,692	
3	0810	CONCRETE A	0	0	8	4	32.00	SF	6.50	6.50	100	2000	2000	3	77	160	
4	0825	BRICK	0	0	0	0	256.00	SF	12.50	12.50	100	2000	2000	3	93	2,976	
5	0441	STK FNC 4'	0	0	0	0	66.00	LF	6.50	6.50	100	2000	2000	3	20	86	
6	1242	WD DECK A	0	0	0	0	158.00	SF	10.00	10.00	100	2000	2000	3	20	316	
7	0300	BOAT DCK W	0	0	8	12	96.00	SF	40.00	40.00	100	2000	2000	3	27	1,037	

LAND DESCRIPTION

TOTAL OB/XF 7,927

LN	USE CODE	CLS	LAND USE DESCRIPTION	CAP	RD	LOC ZONE	FRONT	DEPTH	TOT LND UTS	UNIT TYPE	DT	DPTH FACT	% COND	TOT ADJ	UNIT PRICE	ADJ UNIT PRICE	LAND VALUE	OTHER ADJUSTMENTS AND NOTES	YEAR	DENSITY	DECL	FRZ	YR	CONSRV
1	000140	C	RES GOLF	0		PUD	0.00	0.00	1.00	LT		1.00	1.00	1.00	450,000.00	450,000.00	450,000							

REVIEW DATE 05/12/2019 BY KBA Total Acres: 0.00 Total Land Value: 450,000 Market: 0 Agricultural: 0 Common: 450,000 PRINTED 07/30/2025 BY SYS