LOT 2
LITTLE DUNES PHASE #2 PB 5/365

HEINTZMAN MICHAEL & TERESA L/E/
2 LITTLE DUNES CIRCLE
FERNANDINA BEACH, FL 32034

2025

02-6N-29-DCLO-0002-0000

BUILDING CHARACTERISTICS

ELEMENT	CD	CONSTRUCTION
Exterior Wall	10	ABOVE AVG 100
Roof Structur	03	GABLE/HIP 100
Roof Cover	03	COMP SHNGL 100
Interior Wall	05	DRYWALL 100
Interior Floo	12	HARDWOOD 60
Interior Floo	14	CARPET 40
Air Condition	03	CENTRAL 100
Heating Type	04	AIR DUCTED 100
Bedrooms		3 100
Bathrooms		3 100
Frame	02	WOOD FRAME 100
Stories	2.	2. 100
Units		0 100
Quality	05	Quality Level 05

DOR CODE 0100 SINGLE FAMILY
MAP NUM | MKT AREA 10
NEIGHBORHOOD/LOC 10003.010

AREA TYPE	TOTAL GROSS AREA	PCT OF BASE	YEAR	TOT ADJ AREA	SUBAREA MARKET VALUE
BAS	1,177	100	1996	1,177	244,407
FOP	132	30	1996	40	8,306
FSP	110	40	1996	44	9,137
FUS	898	100	1996	898	186,472
UDC	273	25	1996	68	14,120
UST	40	45	1996	18	3,738
TOTALS	2,630			2,245	466,179

MARKET ADJUSTMENTS

TYPE	MDL	EFF. AREA	TOT ADJ PTS	EFF. BASE RATE	REPL. COST NEW	AYB	EYB	ECON	FNCT		NORM	% COND
0500	11	2,245	151.9392	240.06	538,935	1996	1996	0	0	0	13.50	86.50

1 SFR CUST – 100% - 2019 Heated Area: 2075 HX Base Yr 2019

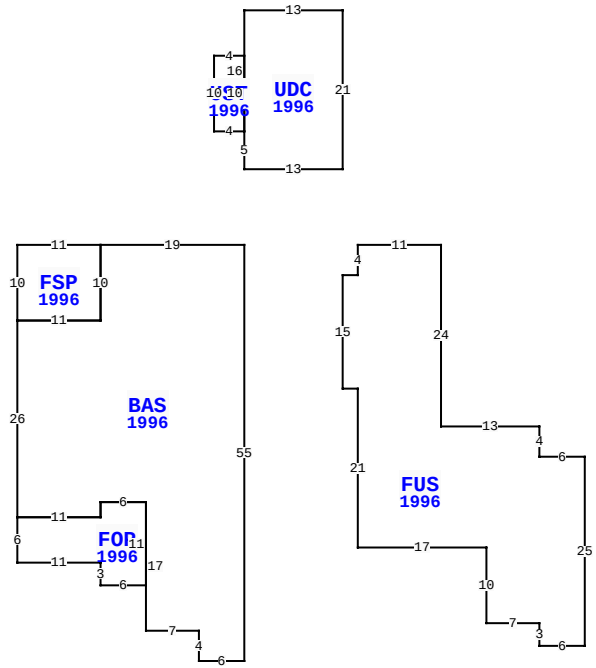

2 LITTLE DUNES CIR, FERNANDINA BEACH

BLD DATE		LGL DATE	
XF DATE		LAND DATE	05/08/2025 MLU
INC DATE		AG DATE	

NASSAU COUNTY PROPERTY

VALUATION SUMMARY

VALUATION BY		STANDARD
Tax Group: 5	Tax Dist:	
BUILDING MARKET VALUE		466,179
TOTAL MARKET OB/XF VALUE		6,774
TOTAL LAND VALUE - MARKET		450,000
TOTAL MARKET VALUE		922,953
SOH/AGL Deduction		363,496
ASSESSED VALUE		559,457
TOTAL EXEMPTION VALUE	HX HB	50,722
BASE TAXABLE VALUE		508,735
TOTAL JUST VALUE		922,953
NCON VALUE		0
INCOME VALUE		
PREVIOUS YEAR MKT VALUE		802,004

PERMIT NUM	DESCRIPTION	AMT	ISSUED
B9502395	NEW CONSTR	70,000	11/01/1995
B9502397	GARAGE	5,520	11/01/1995

SALES DATA

OFF RECORD Number	DATE	TYPE INST	Q / U	V / I	RSN CD	SALE PRICE
2374/1832	7/09/2020	LE	U	I	11	100
GRANTOR: HEINTZMAN MICHAEL F &						
GRANTEE: MICHAEL & TERESA HE						
2220/0781	8/31/2018	WD	Q	I	02	641,000
GRANTOR: JANET I TAYLOR LIVING						
GRANTEE: HEINTZMAN MICHAEL F						

BUILDING NOTES

BUILDING DIMENSIONS

BAS=[YR=1996] W19 FSP=[YR=1996] W11 S10 E11 N10$ S10 W11 S26 FOP=[YR=1996] S6 E11 S3 E6 N11 W6 S2 W11$ E11 N2 E6 S17 E7 S4 E6 N55$ PTR=E15 FUS=[YR=1996] E11 S24 E13 S4 E6 S25 W6 N3 W7 N10 W17 N21 W2 N15 E2 N4$ W15$ PTR=N10 UDC=[YR=1996] N5 UST=[YR=1996] W4 N10 E4 S10$ N16 E13 S21 W13$ S10$.

EXTRA FEATURES

LN	OB/XF CODE	DESCRIPTION	BLD	CAP	L	W	UNITS	UT	Adj R	ADJ UNIT PRICE	ORIG COND	YEAR ON	YEAR ACTUAL	Q	% COND	OB/XF MKT VALUE	NOTES
1	0504	FP-ELECTRI	0	100	0	0	1.00	UT	2,000.00	2,000.00	100	1996	1996	3	77	1,540	
2	0810	CONCRETE A	0	100	0	0	367.00	SF	6.50	6.50	100	1996	1996	3	70	1,670	
3	0825	BRICK	0	100	0	0	298.00	SF	12.50	12.50	100	1996	1996	3	91	3,390	
4	0441	STK FNC 4'	0	100	0	0	134.00	LF	6.50	6.50	100	1996	1996	3	20	174	

LAND DESCRIPTION

TOTAL OB/XF 6,774

LN	USE CODE	CLS	LAND USE DESCRIPTION	CAP	RD	LOC ZONE	FRONT	DEPTH	TOT LND UTS	UNIT TYPE	DT	DPTH FACT	% COND	TOT ADJ	UNIT PRICE	ADJ UNIT PRICE	LAND VALUE	OTHER ADJUSTMENTS AND NOTES	YEAR	DENSITY	DECL	FRZ	YR	CONSRV
1	000100	C	RES	100		PUD	0.00	0.00	1.00	LT		1.00	1.00	1.00	450,000.00	450,000.00	450,000							

REVIEW DATE 05/12/2019 BY KBA Total Acres: 0.00 Total Land Value: 450,000 Market: 0 Agricultural: 0 Common: 450,000 PRINTED 07/30/2025 BY SYS