LOT 11
IN OR 2223/1289
DUNES ROW PHASE II PB 5/315

MULLMAN JOHN P
10 DUNES ROW
FERNANDINA BEACH, FL 32034

**2025**

**02-6N-29-0390-0011-0000**

## NASSAU COUNTY PROPERTY



### BUILDING CHARACTERISTICS

| ELEMENT | CD | CONSTRUCTION |
|---|---|---|
| Exterior Wall | 16 | WD FR STUC 80 |
| Exterior Wall | 17 | CB STUCCO 20 |
| Roof Structur | 08 | IRREGULAR 100 |
| Roof Cover | 07 | CONC TILE 100 |
| Interior Wall | 05 | DRYWALL 70 |
| Interior Wall | 08 | DECORATIVE 30 |
| Interior Floo | 11 | CLAY TILE 50 |
| Interior Floo | 12 | HARDWOOD 50 |
| Air Condition | 03 | CENTRAL 100 |
| Heating Type | 04 | AIR DUCTED 100 |
| Bedrooms | | 5 100 |
| Bathrooms | | 6 100 |
| Frame | 02 | WOOD FRAME 100 |
| Stories | 3. | 3. 100 |
| Units | | 0 100 |
| Quality | 06 | Quality Level 06 |
| DOR CODE | 0100 | SINGLE FAMILY |
| MAP NUM | | MKT AREA 10 |
| NEIGHBORHOOD/LOC | 10003.00 | |

| AREA TYPE | TOTAL GROSS AREA | PCT OF BASE | YEAR | TOT ADJ AREA | SUBAREA MARKET VALUE |
|---|---|---|---|---|---|
| BAS | 1,946 | 100 | 1995 | 1,946 | 641,489 |
| BAS | 70 | 100 | 2013 | 70 | 23,076 |
| FEP | 70 | 80 | 2013 | 56 | 18,460 |
| FGR | 1,302 | 55 | 1995 | 716 | 236,026 |
| FOP | 50 | 30 | 1995 | 15 | 4,944 |
| FOP | 194 | 30 | 1995 | 58 | 19,120 |
| FOP | 194 | 30 | 1995 | 58 | 19,120 |
| FST | 36 | 55 | 1995 | 20 | 6,593 |
| FST | 172 | 55 | 1995 | 95 | 31,316 |
| FUS | 1,394 | 100 | 1995 | 1,394 | 459,526 |
| TOTALS | 9,110 | | | 6,750 | 2,225,105 |

### MARKET ADJUSTMENTS

| TYPE | MDL | EFF. AREA | TOT ADJ PTS | EFF. BASE RATE | REPL. COST NEW | AYB | EYB | ECON | FNCT | | NORM | % COND |
|---|---|---|---|---|---|---|---|---|---|---|---|---|
| 0500 | 12 | 6,750 | 244.0218 | 385.55 | 2,602,462 | 1995 | 1995 | 0 | 0 | 0 | 14.50 | 85.50 |

1 SFR CUST – 0% - 0 Heated Area: 5392 HX Base Yr

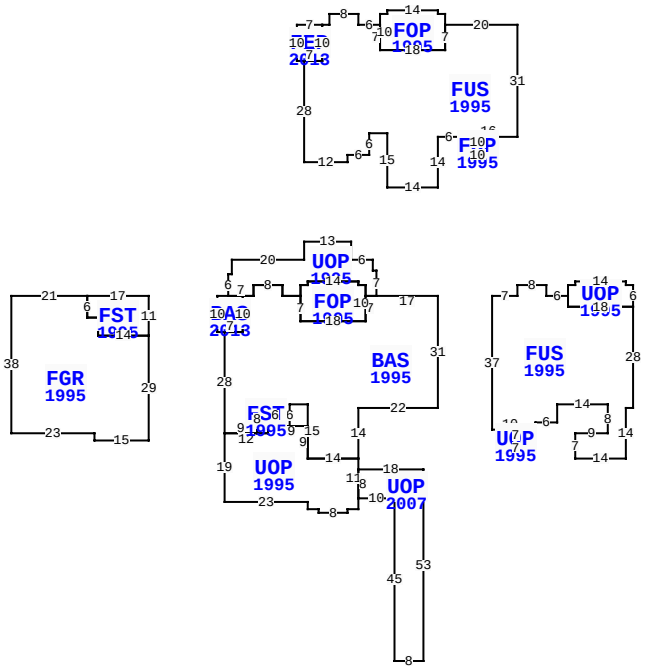


** This building has 16 Sub-Areas

10 DUNES ROW, FERNANDINA BEACH

| | | | |
|---|---|---|---|
| BLD DATE | | LGL DATE | |
| XF DATE | | LAND DATE | 05/08/2025 MLU |
| INC DATE | | AG DATE | |

### VALUATION SUMMARY

| | |
|---|---|
| VALUATION BY | STANDARD |
| Tax Group: 5 | Tax Dist: |
| BUILDING MARKET VALUE | 2,225,105 |
| TOTAL MARKET OB/XF VALUE | 48,036 |
| TOTAL LAND VALUE - MARKET | 2,500,000 |
| TOTAL MARKET VALUE | 4,773,141 |
| SOH/AGL Deduction | 0 |
| ASSESSED VALUE | 4,773,141 |
| TOTAL EXEMPTION VALUE | 0 |
| BASE TAXABLE VALUE | 4,773,141 |
| TOTAL JUST VALUE | 4,773,141 |
| NCON VALUE | 0 |
| INCOME VALUE | |
| PREVIOUS YEAR MKT VALUE | 4,473,331 |

| PERMIT NUM | DESCRIPTION | AMT | ISSUED |
|---|---|---|---|
| B25470 | ADDITION | 29,687 | 01/01/2012 |
| B24760 | REMODEL | 8,250 | 05/01/2011 |
| B9906269 | REMODEL | 850 | 07/01/1999 |
| V9900047 | REMODEL | 1,500 | 07/01/1999 |
| B9400768 | NEW CONSTR | 627,000 | 02/01/1994 |

### SALES DATA

| OFF RECORD Number | DATE | TYPE INST | Q / U | V / I | RSN CD | SALE PRICE |
|---|---|---|---|---|---|---|
| 2223/1289 | 9/13/2018 | WD | Q | I | 01 | 3,350,000 |
| GRANTOR: ERICKSON JOHN RUSSELL | | | | | | |
| GRANTEE: MULLMAN JOHN P | | | | | | |
| 1831/0057 | 12/17/2012 | QC | U | I | 11 | 100 |
| GRANTOR: ERICKSON JOHN R & KIM | | | | | | |
| GRANTEE: ERICKSON KIMBERLY D | | | | | | |

### BUILDING NOTES

### BUILDING DIMENSIONS

BAS=[YR=1995] W17 UOP=[YR=1995] N7 W1 N3 W6 N5 W13 S5 W20 S4 W1 S6 BAS=[YR=2013] W3 S10 E7 N10W4 $ E7 N3 E8 S3 E5 FOP=[YR=1995] S7E18N10 W2 N1 W14 S1 W2 S3 $ N3 E2N1 E14 S1E2S3 E3 $ W3 S7W18 N7 W5 N3 W8 S3 W3 S10 W5 S28UOP=[YR=1995] S19E23S2E3S1 E8N1E3N3 UOP=[YR=2007] E10 S45 E8 N53 W18 S8$ N11 W14 N9W9 FST=[YR=1995] N6W5S8 E3N2E2$ W2 S2 W12 $ E9 N8E5S6 E4 N6E5S15 E14N14 E22 N31 $ PTR=E15 FUS=[YR=1995] E7 N3 E8S3E6UOP=[YR=1995] N3 E2N1E14 S1 E2 S6W18 N3 $S3 E18 S28W2 S14W14 N7E9 N8 W14 S5 W6 S2 W2 UOP=[YR=1995] S5W7N5E7$ W10 N37 $W15 $ PTR= N30 FUS=[YR=1995] N14E6 FOP=[YR=1995] S5 E10 N5W10 $ E16N31 W20 FOP=[YR=1995] N3W2 N1 W14 S1 W2 S10 E18 N7 $ S7 W18N7W6 N3 W8

### EXTRA FEATURES

| LN | OB/XF CODE | DESCRIPTION | BLD | CAP | L | W | UNITS | UT | Adj R | ADJ UNIT PRICE | ORIG COND | YEAR ON | YEAR ACTUAL | Q | % COND | OB/XF MKT VALUE | NOTES |
|---|---|---|---|---|---|---|---|---|---|---|---|---|---|---|---|---|---|
| 1 | 0504 | FP-ELECTRI | 0 | 0 | 0 | 0 | 1.00 | UT | 2,000.00 | 2,000.00 | 100 | 1995 | 1995 | 3 | 76 | 1,520 | |
| 2 | 0410 | ELEVATOR | 0 | 0 | 0 | 0 | 1.00 | UT | 20,000.00 | 20,000.00 | 100 | 1995 | 1995 | 3 | 100 | 20,000 | |
| 3 | 0812 | CONCRETE C | 0 | 0 | 0 | 0 | 2,572.00 | SF | 4.00 | 4.00 | 100 | 1995 | 1995 | 3 | 68 | 6,996 | |
| 4 | 0825 | BRICK | 0 | 0 | 0 | 0 | 95.00 | SF | 12.50 | 12.50 | 100 | 1995 | 1995 | 3 | 90 | 1,069 | |
| 5 | 0810 | CONCRETE A | 0 | 0 | 0 | 0 | 210.00 | SF | 6.50 | 6.50 | 100 | 1995 | 1995 | 3 | 68 | 928 | |
| 6 | 1126 | CB/STC 8" | 0 | 0 | 0 | 0 | 293.00 | SF | 8.00 | 8.00 | 100 | 1995 | 1995 | 3 | 68 | 1,594 | |
| 7 | 0810 | CONCRETE A | 0 | 0 | 0 | 0 | 25.00 | SF | 6.50 | 6.50 | 100 | 1995 | 1995 | 3 | 68 | 111 | |
| 8 | 0825 | BRICK | 0 | 0 | 0 | 0 | 1,406.00 | SF | 12.50 | 12.50 | 100 | 1995 | 1995 | 3 | 90 | 15,818 | |

### LAND DESCRIPTION

TOTAL OB/XF 48,036

| LN | USE CODE | CLS | LAND USE DESCRIPTION | CAP | RD | LOC ZONE | FRONT | DEPTH | TOT LND UTS | UNIT TYPE | DT | DPTH FACT | % COND | TOT ADJ | UNIT PRICE | ADJ UNIT PRICE | LAND VALUE | OTHER ADJUSTMENTS AND NOTES | YEAR | DENSITY | DECL | FRZ | YR | CONSRV |
|---|---|---|---|---|---|---|---|---|---|---|---|---|---|---|---|---|---|---|---|---|---|---|---|---|
| 1 | 000120 | C | RES OCEAN | 0 | | PUD | 0.00 | 0.00 | 1.00 | LT | | 1.00 | 1.00 | 1.00 | 2,500,000.00 | 2,500,000.00 | 2,500,000 | | | | | | | |

REVIEW DATE 11/14/2019 BY DJA Total Acres: 0.00 Total Land Value: 2,500,000 Market: 0 Agricultural: 0 Common: 2,500,000 PRINTED 07/30/2025 BY SYS