PT NE 1/4 OF SEC 02-3N-26E
RECD IN OR 2426/1757
TELE ESMT OR 733/15

FLORIDA MOTEL INC
777 BRICKELL AVE, SUITE #5009229
MIAMI, FL 33131

2025

02-3N-26-0000-0002-0010

BUILDING CHARACTERISTICS

ELEMENT	CD	CONSTRUCTION
Exterior Wall	17	CB STUCCO 80
Exterior Wall	28	GLASS THRM 20
Roof Structur	13	P-STRESS C 100
Roof Cover	04	BUILT-UP 100
Interior Wall	05	DRYWALL 50
Interior Wall	08	DECORATIVE 50
Interior Floo	14	CARPET 100
Ceiling	01	FIN.SUSPD 100
Air Condition	03	CENTRAL 100
Heating Type	04	AIR DUCTED 100
Fixtures		152 100
Frame	03	MASONRY 100
Story Height		8 100
RMS		52 100
Units		0 100
Occupancy	00	NONE 100
Quality	02	Quality Level 02
DOR CODE	3900	HOTELS AND MOTELS
MAP NUM		MKT AREA 05
NEIGHBORHOOD/LOC	4001.00	

AREA TYPE	TOTAL GROSS AREA	PCT OF BASE	YEAR	TOT ADJ AREA	SUBAREA MARKET VALUE
BAS	8,798	100	1993	8,798	86,220
FOP	583	20	1993	117	1,147
FOP	583	20	1993	117	1,147
FOP	830	20	1993	166	1,627
FOP	830	20	1993	166	1,627
FOP	830	20	1993	166	1,627
FOP	830	20	1993	166	1,627
FUS	8,798	100	1993	8,798	86,220
TOTALS	22,082			18,494	181,241

MARKET ADJUSTMENTS

TYPE	MDL	EFF. AREA	TOT ADJ PTS	EFF. BASE RATE	REPL. COST NEW	AYB	EYB	ECON	FNCT		NORM	% COND
3901	07	18,494	108.2851	98.00	1,812,412	1983	1983	40	0	0	62.00	10.00

1 MOTEL – 0% - 0 Heated Area: 17596 HX Base Yr

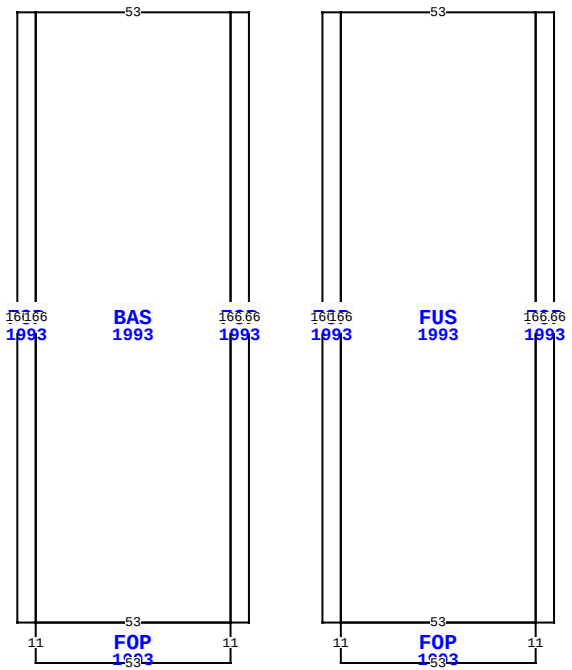

852380 US HWY 17, YULEE

BLD DATE	04/07/2021	KK	LGL DATE	
XF DATE	04/07/2021	KK	LAND DATE	03/24/2025 DB
INC DATE			AG DATE	

NASSAU COUNTY PROPERTY

PAGE 1 of 2 4

VALUATION SUMMARY

VALUATION BY	RECONCILE
Tax Group: 4	Tax Dist:
BUILDING MARKET VALUE	164,103
TOTAL MARKET OB/XF VALUE	100
TOTAL LAND VALUE - MARKET	25,500
TOTAL MARKET VALUE	189,703
SOH/AGL Deduction	0
ASSESSED VALUE	189,703
TOTAL EXEMPTION VALUE	0
BASE TAXABLE VALUE	189,703
TOTAL JUST VALUE	189,703
NCON VALUE	0
INCOME VALUE	8
PREVIOUS YEAR MKT VALUE	189,703

PERMIT NUM	DESCRIPTION	AMT	ISSUED

SALES DATA

OFF RECORD Number	DATE	TYPE INST	Q U /	V I /	RSN CD	SALE PRICE
2426/1757	1/21/2021	QC	U	I	11	100
GRANTOR: FLORIDA MOTEL INC						
GRANTEE: FLORIDA MOTEL INC						
1948/1829	11/24/2014	CT	U	I	18	188,200
GRANTOR: CLERK OF COURT						
GRANTEE: FLORIDA MOTEL INC						

BUILDING NOTES

BUILDING DIMENSIONS

FOP=[YR=1993] W5 BAS=[YR=1993] W53 FOP=[YR=1993] W5 S166 E5 FOP=[YR=1993] S11 E53 N11 W53$ N166$ S166 E53 N166$ S166 E5 N166$ PTR=E20 FOP=[YR=1993] E5 FUS=[YR=1993] E53 FOP=[YR=1993] E5 S166 W5 FOP=[YR=1993] S11 W53 N11 E53$ N166$ S166 W53 N166$ S166 W5 N166$ W20$.

EXTRA FEATURES

LN	OB/XF CODE	DESCRIPTION	BLD	CAP	L	W	UNITS	UT	Adj R	ADJ UNIT PRICE	ORIG COND	YEAR ON	YEAR ACTUAL	Q	% COND	OB/XF MKT VALUE	NOTES
1	0803	ASPHALT C	0	0	0	0	21,771.00	SF	0.40	0.40	100	1983	1983	3	50	4,354	
2	0505	FLAGPOLE A	0	0	0	0	1.00	LF	50.00	50.00	100	1994	1994	3	20	10	
3	0881	FOUNTAIN	0	0	0	0	1.00	UT	1,000.00	1,000.00	100	1994	1994	3	100	1,000	
4	0887	POOL FILTR	0	0	0	0	1.00	UT	650.00	650.00	100	1994	1994	3	20	130	
5	0402	CONC BUMPE	0	0	0	0	13.00	UT	25.00	25.00	100	1994	1994	3	74	241	
6	0861	POOL GUNIT	0	0	38	18	684.00	SF	8.50	8.50	100	1994	1994	3	20	1,163	
7	0845	KOOL DECK	0	0	0	0	1,600.00	SF	7.25	7.25	100	1994	1994	3	66	7,656	
8	0443	STK FNC 6'	0	0	0	0	122.00	LF	10.00	10.00	100	1998	1998	3	20	244	
9	0443	STK FNC 6'	0	0	0	0	240.00	LF	10.00	10.00	100	1998	1998	3	20	480	
10	0443	STK FNC 6'	0	0	0	0	80.00	LF	10.00	10.00	100	1999	1999	3	20	160	

TOTAL OB/XF 15,438

LAND DESCRIPTION

LN	USE CODE	CLS	LAND USE DESCRIPTION	CAP	RD	LOC ZONE	FRONT	DEPTH	TOT LND UTS	UNIT TYPE	DT	DPTH FACT	% COND	TOT ADJ	UNIT PRICE	ADJ UNIT PRICE	LAND VALUE	OTHER ADJUSTMENTS AND NOTES	YEAR	DENSITY	DECL	FRZ	YR	CONSRV
1	003900	C	MOTEL	0		CHT	0.00	0.00	1.02	AC		1.00	1.00	1.00	32,500.00	32,500.00	33,150							

REVIEW DATE 04/07/2021 BY KK Total Acres: 1.02 Total Land Value: 25,500 Market: 0 Agricultural: 0 Common: 25,500 PRINTED 07/30/2025 BY SYS

PT NE 1/4 OF SEC 02-3N-26E
RECD IN OR 2426/1757
TELE ESMT OR 733/15

FLORIDA MOTEL INC
777 BRICKELL AVE, SUITE #5009229
MIAMI, FL 33131

2025

02-3N-26-0000-0002-0010

NASSAU COUNTY PROPERTY

BUILDING CHARACTERISTICS

ELEMENT	CD	CONSTRUCTION
Exterior Wall	16	WD FR STUC 60
Exterior Wall	17	CB STUCCO 40
Roof Structur	04	WOOD TRUSS 100
Roof Cover	12	MODULAR MT 100
Interior Wall	05	DRYWALL 60
Interior Wall	08	DECORATIVE 40
Interior Floo	14	CARPET 60
Interior Floo	11	CLAY TILE 40
Ceiling	01	FIN.SUSPD 100
Air Condition	03	CENTRAL 100
Heating Type	04	AIR DUCTED 100
Fixtures		7 100
Frame	03	MASONRY 100
Story Height		0 100
RMS		4 100
Units		0 100
Occupancy	00	NONE 100
Quality	02	Quality Level 02
DOR CODE	3900	HOTELS AND MOTELS
MAP NUM		MKT AREA 05
NEIGHBORHOOD/LOC	4001.00	

AREA TYPE	TOTAL GROSS AREA	PCT OF BASE	YEAR	TOT ADJ AREA	SUBAREA MARKET VALUE
BAS	1,500	100	1995	1,500	12,321
FCP	672	20	1995	134	1,101
FST	400	50	1995	200	1,643
FST	1,900	50	1995	950	7,803
LBA	432	110	1995	475	3,902
LBA	432	110	1995	475	3,902
TOTALS	5,336			3,734	30,671

MARKET ADJUSTMENTS

TYPE	MDL	EFF. AREA	TOT ADJ PTS	EFF. BASE RATE	REPL. COST NEW	AYB	EYB	ECON	FNCT	AP	NORM	% COND
3901	07	3,734	90.7626	82.14	306,711	1995	1995	40	0	25	32.00	10.00

2 MOTEL – 0% - 0 Heated Area: 2364 HX Base Yr

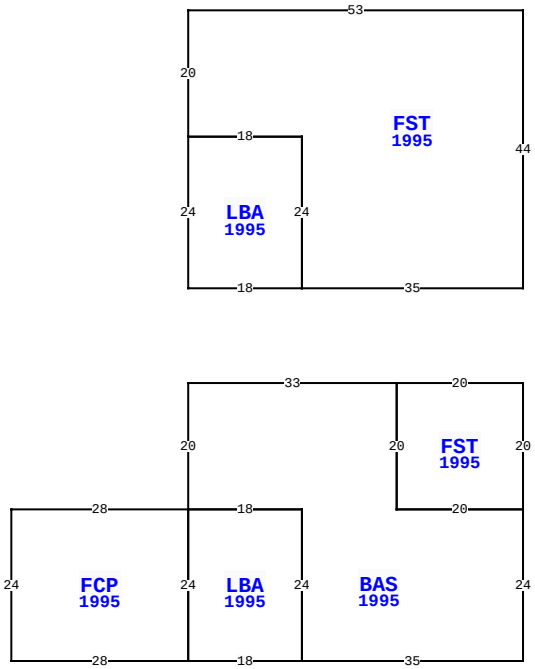

852380 US HWY 17, YULEE

BLD DATE	04/07/2021	KK	LGL DATE	
XF DATE	04/07/2021	KK	LAND DATE	03/24/2025 DB
INC DATE			AG DATE	

VALUATION SUMMARY

VALUATION BY	RECONCILE
Tax Group: 4	Tax Dist:
BUILDING MARKET VALUE	164,103
TOTAL MARKET OB/XF VALUE	100
TOTAL LAND VALUE - MARKET	25,500
TOTAL MARKET VALUE	189,703
SOH/AGL Deduction	0
ASSESSED VALUE	189,703
TOTAL EXEMPTION VALUE	0
BASE TAXABLE VALUE	189,703
TOTAL JUST VALUE	189,703
NCON VALUE	0
INCOME VALUE	8
PREVIOUS YEAR MKT VALUE	189,703

PERMIT NUM	DESCRIPTION	AMT	ISSUED

SALES DATA

OFF RECORD Number	DATE	TYPE INST	Q U	V I	RSN CD	SALE PRICE
2426/1757	1/21/2021	QC	U	I	11	100
GRANTOR: FLORIDA MOTEL INC						
GRANTEE: FLORIDA MOTEL INC						
1948/1829	11/24/2014	CT	U	I	18	188,200
GRANTOR: CLERK OF COURT						
GRANTEE: FLORIDA MOTEL INC						

BUILDING NOTES

BUILDING DIMENSIONS

FST=[YR=1995] W20 BAS=[YR=1995] W33 S20 FCP=[YR=1995] W28 S24 E28 LBA=[YR=1995] E18 N24 W18 S24$ N24$ E18 S24 E35 N24 W20 N20$ S20 E20 N20$ PTR=N15 FST=[YR=1995] N44 W53 S20 LBA=[YR=1995] S24 E18 N24 W18$ E18 S24 E35$ S15$.

EXTRA FEATURES

LN	OB/XF CODE	DESCRIPTION	BLD	CAP	L	W	UNITS	UT	Adj R	ADJ UNIT PRICE	ORIG COND	YEAR ON	YEAR ACTUAL	Q	% COND	OB/XF MKT VALUE	NOTES

LAND DESCRIPTION

TOTAL OB/XF 0

LN	USE CODE	CLS	LAND USE DESCRIPTION	CAP	RD	LOC ZONE	FRONT	DEPTH	TOT LND UTS	UNIT TYPE	DT	DPTH FACT	% COND	TOT ADJ	UNIT PRICE	ADJ UNIT PRICE	LAND VALUE	OTHER ADJUSTMENTS AND NOTES	YEAR	DENSITY	DECL	FRZ	YR	CONSRV

REVIEW DATE 04/07/2021 BY KK Total Acres: 1.02 Total Land Value: 25,500 Market: 0 Agricultural: 0 Common: 25,500 PRINTED 07/30/2025 BY SYS