PT OF SE1/4 OF SE1/4
IN OR 2257/517

HEDRICK DARIN & MICHELE M
36201 GAGE ROAD
CALLAHAN, FL 32011

2025

02-2N-24-0000-0007-0010

BUILDING CHARACTERISTICS

ELEMENT	CD	CONSTRUCTION
Exterior Wall	30	VINYL 100
Roof Structur	03	GABLE/HIP 100
Roof Cover	03	COMP SHNGL 100
Interior Wall	05	DRYWALL 100
Interior Floo	12	HARDWOOD 70
Interior Floo	11	CLAY TILE 30
Air Condition	03	CENTRAL 100
Heating Type	04	AIR DUCTED 100
Bedrooms		3 100
Bathrooms		2 100
Frame	02	WOOD FRAME 100
Stories	1.	1. 100
Units		0 100
Occupancy	00	NONE 100
Quality	04	Quality Level 04
DOR CODE	0100	SINGLE FAMILY
MAP NUM		MKT AREA 08
NEIGHBORHOOD/LOC	8001.00	

AREA TYPE	TOTAL GROSS AREA	PCT OF BASE	YEAR	TOT ADJ AREA	SUBAREA MARKET VALUE
BAS	1,764	100	1997	1,764	239,553
BAS	527	100	2003	527	71,567
FOP	376	30	1997	113	15,345
PTO	505	5	2021	25	3,395
TOTALS	3,172			2,429	329,860

MARKET ADJUSTMENTS

TYPE	MDL	EFF. AREA	TOT ADJ PTS	EFF. BASE RATE	REPL. COST NEW	AYB	EYB	ECON	FNCT		NORM	% COND
0900	01	2,429	114.6306	151.31	367,532	1997	2003	0	0	0	10.25	89.75

1 SNGL FAM – 100% - 2020 Heated Area: 2291 HX Base Yr 2020

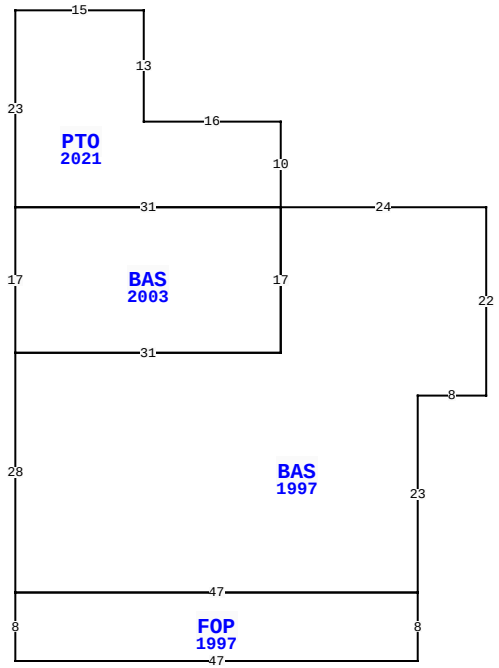

36201 GAGE RD, CALLAHAN

BLD DATE		LGL DATE	
XF DATE		LAND DATE	05/21/2025 MLU
INC DATE		AG DATE	

NASSAU COUNTY PROPERTY

PAGE 1 of 2 6

VALUATION SUMMARY

VALUATION BY		STANDARD
Tax Group: 6	Tax Dist:	
BUILDING MARKET VALUE		361,767
TOTAL MARKET OB/XF VALUE		3,365
TOTAL LAND VALUE - MARKET		65,700
TOTAL MARKET VALUE		430,832
SOH/AGL Deduction		165,590
ASSESSED VALUE		265,242
TOTAL EXEMPTION VALUE	HX HB	50,722
BASE TAXABLE VALUE		214,520
TOTAL JUST VALUE		430,832
NCON VALUE		0
INCOME VALUE		
PREVIOUS YEAR MKT VALUE		391,824

PERMIT NUM	DESCRIPTION	AMT	ISSUED
21003974	GARAGE	106,662	04/01/2021
18002680	REPAIR/RRF	11,644	04/05/2018
B974078	NEW CONSTR	80,000	07/01/1997

SALES DATA

OFF RECORD Number	DATE	TYPE INST	Q / U	V / I	RSN CD	SALE PRICE
2257/0517	2/28/2019	WD	Q	I	01	250,000
GRANTOR: ADAMS ROBERT J JR & C						
GRANTEE: HEDRICK DARIN & MIC						
2016/1632	12/01/2015	SW	U	I	12	150,000
GRANTOR: VYSTAR CREDIT UNION						
GRANTEE: ADAMS ROBERT J JR &						

BUILDING NOTES

BUILDING DIMENSIONS

BAS=[YR=1997] W24 PTO=[YR=2021] N10 W16 N13 W15 S23
BAS=[YR=2003] S17 E31 N17 W31$ E31$ S17 W31 S28 FOP=[YR=1997]
S8 E47 N8 W47 $ E47 N23 E8 N22$.

EXTRA FEATURES

LN	OB/XF CODE	DESCRIPTION	BLD	CAP	L	W	UNITS	UT	Adj R	ADJ UNIT PRICE	ORIG COND	YEAR ON	YEAR ACTUAL	Q	% COND	OB/XF MKT VALUE	NOTES
1	0500	FP-PRE FAB	0	100	0	0	1.00	UT	3,500.00	3,500.00	100	1997	1997	3	79	2,765	
2	0940	SHEDS/PORT	0	100	10	10	100.00	SF	30.00	30.00	100	1998	1998	3	20	600	

LAND DESCRIPTION

TOTAL OB/XF 3,365

LN	USE CODE	CLS	LAND USE DESCRIPTION	CAP	RD	LOC ZONE	FRONT	DEPTH	TOT LND UTS	UNIT TYPE	DT	DPTH FACT	% COND	TOT ADJ	UNIT PRICE	ADJ UNIT PRICE	LAND VALUE	OTHER ADJUSTMENTS AND NOTES	YEAR	DENSITY	DECL	FRZ	YR	CONSRV
1	000100	C	RES	100	0007	OR	0.00	0.00	1.46	AC		1.00	1.00	1.00	45,000.00	45,000.00	65,700							

REVIEW DATE 08/09/2021 BY TW Total Acres: 1.46 Total Land Value: 65,700 Market: 0 Agricultural: 0 Common: 65,700 PRINTED 07/30/2025 BY SYS

PT OF SE1/4 OF SE1/4
IN OR 2257/517

HEDRICK DARIN & MICHELE M
36201 GAGE ROAD
CALLAHAN, FL 32011

2025

02-2N-24-0000-0007-0010

BUILDING CHARACTERISTICS

ELEMENT	CD	CONSTRUCTION
Exterior Wall	25	MOD METAL 100
Roof Structur	03	GABLE/HIP 100
Roof Cover	12	MODULAR MT 100
Interior Wall		N/A 100
Interior Floo	03	CONC FINSH 100
Air Condition	99	N/A 100
Heating Type		N/A 100
Bedrooms		0 100
Bathrooms		0 100
Frame	05	STEEL 100
Stories	0	0 100
Units		0 100
Occupancy	00	NONE 100

Quality	06	Quality Level 06
DOR CODE	0100	SINGLE FAMILY
MAP NUM		MKT AREA 08
NEIGHBORHOOD/LOC	8001.00	

AREA TYPE	TOTAL GROSS AREA	PCT OF BASE	YEAR	TOT ADJ AREA	SUBAREA MARKET VALUE
BAS	1,600	100	2021	1,600	30,978
UCP	240	20	2021	48	929
TOTALS	1,840			1,648	31,907

MARKET ADJUSTMENTS

TYPE	MDL	EFF. AREA	TOT ADJ PTS	EFF. BASE RATE	REPL. COST NEW	AYB	EYB	ECON	FNCT		NORM	% COND
6500	01	1,648	53.9580	19.96	32,894	2021	2021	0	0	0	3.00	97.00

2 GARAGE RES – 100% - 2020 Heated Area: 1600 HX Base Yr 2020

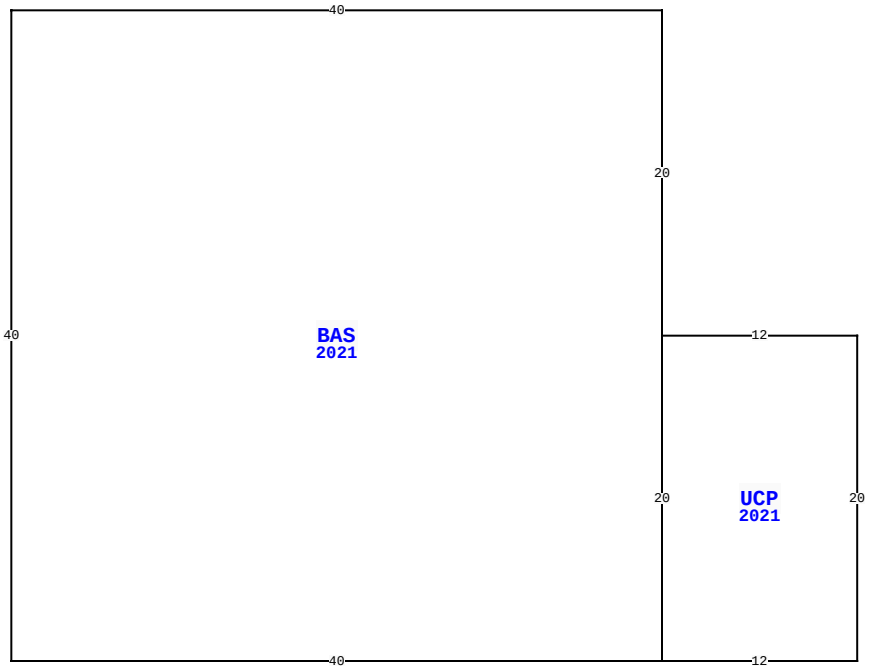

36201 GAGE RD, CALLAHAN

BLD DATE		LGL DATE	05/21/2025 MLU
XF DATE		LAND DATE	
INC DATE		AG DATE	

NASSAU COUNTY PROPERTY

PAGE 2 of 2 6

VALUATION SUMMARY

VALUATION BY		STANDARD
Tax Group: 6	Tax Dist:	
BUILDING MARKET VALUE		361,767
TOTAL MARKET OB/XF VALUE		3,365
TOTAL LAND VALUE - MARKET		65,700
TOTAL MARKET VALUE		430,832
SOH/AGL Deduction		165,590
ASSESSED VALUE		265,242
TOTAL EXEMPTION VALUE	HX HB	50,722
BASE TAXABLE VALUE		214,520
TOTAL JUST VALUE		430,832
NCON VALUE		0
INCOME VALUE		
PREVIOUS YEAR MKT VALUE		391,824

PERMIT NUM	DESCRIPTION	AMT	ISSUED

SALES DATA

OFF RECORD Number	DATE	TYPE INST	Q / U	V / I	RSN CD	SALE PRICE
2257/0517	2/28/2019	WD	Q	I	01	250,000
GRANTOR: ADAMS ROBERT J JR & C						
GRANTEE: HEDRICK DARIN & MIC						
2016/1632	12/01/2015	SW	U	I	12	150,000
GRANTOR: VYSTAR CREDIT UNION						
GRANTEE: ADAMS ROBERT J JR &						

BUILDING NOTES

BUILDING DIMENSIONS

UCP=[YR=2021] W12 BAS=[YR=2021] N20 W40 S40 E40 N20$ S20 E12 N20$.

EXTRA FEATURES

L N	OB/XF CODE	DESCRIPTION	BLD	CAP	L	W	UNITS	UT	Adj R	ADJ UNIT PRICE	ORIG COND	YEAR ON	YEAR ACTUAL	Q	% COND	OB/XF MKT VALUE	NOTES

LAND DESCRIPTION

TOTAL OB/XF 0

L N	USE CODE	CLS	LAND USE DESCRIPTION	CAP	R D	LOC ZONE	FRONT	DEPTH	TOT LND UTS	UNIT TYPE	D T	DPTH FACT	% COND	TOT ADJ	UNIT PRICE	ADJ UNIT PRICE	LAND VALUE	OTHER ADJUSTMENTS AND NOTES	YEAR	DENSITY	DECL	FRZ	YR	CONSRV

REVIEW DATE 08/09/2021 BY TW Total Acres: 1.46 Total Land Value: 65,700 Market: 0 Agricultural: 0 Common: 65,700 PRINTED 07/30/2025 BY SYS