PT GOVT LOT 2 OF SEC 22-2N-28E
IN OR 560/718, OR 568/1098 &
OR 1225/1723

AMELIA PLANTATION CHAPEL INC
36 BOWMAN ROAD
FERNANDINA BEACH, FL 32034

2025

01-6N-29-AICO-0003-0160

BUILDING CHARACTERISTICS

ELEMENT	CD	CONSTRUCTION
Exterior Wall	14	WD SHINGLE 100
Roof Structur	04	WOOD TRUSS 100
Roof Cover	03	COMP SHNGL 100
Interior Wall	08	DECORATIVE 80
Interior Wall	05	DRYWALL 20
Interior Floo	14	CARPET 50
Interior Floo	18	SLATE 50
Ceiling	02	F.NOT SUS 100
Air Condition	03	CENTRAL 100
Heating Type	04	AIR DUCTED 100
Fixtures		12 100
Frame	03	MASONRY 100
Story Height		20 100
RMS		5 100
Stories	1.	1. 100
Units		0 100
Occupancy	00	NONE 100
Quality	04	Quality Level 04
DOR CODE	7100	CHURCHES
MAP NUM		MKT AREA 10
NEIGHBORHOOD/LOC	10002.00	

AREA TYPE	TOTAL GROSS AREA	PCT OF BASE	YEAR	TOT ADJ AREA	SUBAREA MARKET VALUE
BAS	6,000	100	1993	6,000	1,040,322
BAS	220	100	2006	220	38,145
FOP	98	30	1993	29	5,028
FST	40	50	1993	20	3,468
FST	40	50	1993	20	3,468
FST	96	50	1993	48	8,322
FUS	645	100	1993	645	111,835
UOP	60	20	1993	12	2,081
UOP	274	20	1993	55	9,537
TOTALS	7,473			7,049	1,222,205

MARKET ADJUSTMENTS

TYPE	MDL	EFF. AREA	TOT ADJ PTS	EFF. BASE RATE	REPL. COST NEW	AYB	EYB	ECON	FNCT		NORM	% COND
7101	04	7,049	133.6940	208.90	1,472,536	1990	1990	0	0	0	17.00	83.00

1 CHURCH – 0% - 0 Heated Area: 6865 HX Base Yr

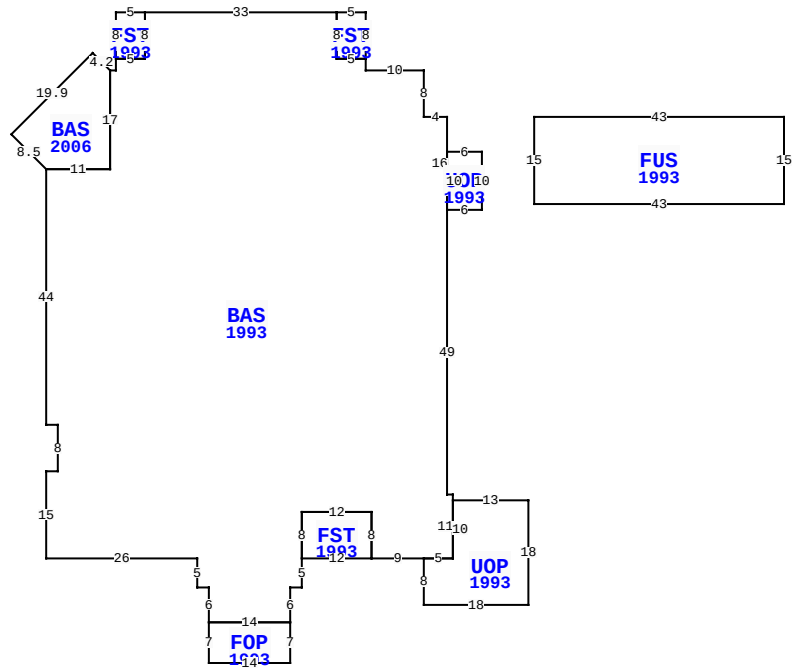

36 BOWMAN RD, FERNANDINA BEACH

BLD DATE	02/03/2022	KK	LGL DATE	
XF DATE	02/03/2022	KK	LAND DATE	02/03/2022 KK
INC DATE			AG DATE	

NASSAU COUNTY PROPERTY

PAGE 1 of 2 5

VALUATION SUMMARY

VALUATION BY		STANDARD
Tax Group: 5	Tax Dist:	
BUILDING MARKET VALUE		2,549,977
TOTAL MARKET OB/XF VALUE		115,824
TOTAL LAND VALUE - MARKET		1,318,260
TOTAL MARKET VALUE		3,984,061
SOH/AGL Deduction		1,512,825
ASSESSED VALUE		2,471,236
TOTAL EXEMPTION VALUE	02	2,471,236
BASE TAXABLE VALUE		0
TOTAL JUST VALUE		3,984,061
NCON VALUE		0
INCOME VALUE		
PREVIOUS YEAR MKT VALUE		4,004,358

PERMIT NUM	DESCRIPTION	AMT	ISSUED
R1615088	REPAIR/RRF	62,000	06/01/2016
B1327856	CO ISSUED	0	11/27/2013
B25616	REMODEL	23,000	03/01/2012
B23628	REPAIR/RRF	3,000	05/01/2010
M10146	MECH OTHER	2,250	08/01/2005
P0371	OTHER	500	02/01/1994

SALES DATA

OFF RECORD Number	DATE	TYPE INST	Q / U	V / I	RSN CD	SALE PRICE
1225/1723	4/27/2004	QC	U	V	19	100
GRANTOR: AMELIA ISLAND COMPANY						
GRANTEE: AMELIA PLANTATION C						
0568/1098	5/01/1989	WD	Q	V		175,000
GRANTOR: DAYLIGHT INDUSTRIES						
GRANTEE: AMELIA PLANT CHAPEL						

BUILDING NOTES

BUILDING DIMENSIONS

BAS=[YR=1993] W4 N8 W10 N2 FST=[YR=1993] N8 W5 S8 E5$ W5 N8 W33 FST=[YR=1993] W5 S8 E5 N8$ S8 W5 S2 W1 BAS=[YR=2006] U3 L3 L14 D14 D6 R6 E11 N17$ S17 W11 S44 E2 S8 W2 S15 E26 S5 E2 S6 FOP=[YR=1993] S7 E14 N7 W14$ E14 N6 E2 N5 FST=[YR=1993] E12 N8 W12 S8$ N8 E12 S8 E9 UOP=[YR=1993] S8 E18 N18 W13S10W5$ E5N11W1N49 UOP=[YR=1993] E6 N10 W6 S10$ N16$ PTR=E15 FUS=[YR=1993] E43 S15 W43 N15$ W15$.

EXTRA FEATURES

LN	OB/XF CODE	DESCRIPTION	BLD	CAP	L	W	UNITS	UT	Adj R	ADJ UNIT PRICE	ORIG COND	YEAR ON	YEAR ACTUAL	Q	% COND	OB/XF MKT VALUE	NOTES
1	0850	PEBBLE WLK	0	0	0	0	1,587.00	SF	3.50	3.50	100	1990	1990	3	57	3,166	
2	0810	CONCRETE A	0	0	12	5	60.00	SF	6.50	6.50	100	1996	1996	3	70	273	
3	0850	PEBBLE WLK	0	0	0	0	1,672.00	SF	3.50	3.50	100	1996	1996	3	70	4,096	
4	0850	PEBBLE WLK	0	0	0	0	326.00	SF	3.50	3.50	100	2000	2000	3	77	879	
5	0830	FLAGSTONE	0	0	0	0	265.00	SF	12.00	12.00	100	1996	1996	3	70	2,226	
6	1129	STONE 8"	0	0	0	0	414.00	SF	15.75	15.75	100	1996	1996	3	91	5,934	
7	0446	BOX FNC 6'	0	0	0	0	7.00	LF	20.00	20.00	100	2000	2000	3	20	28	
8	0300	BOAT DCK W	0	0	0	0	393.00	SF	40.00	40.00	100	2006	2006	3	40	6,288	
9	0410	ELEVATOR	0	0	0	0	1.00	UT	20,000.00	20,000.00	100	2006	2006	3	100	20,000	
10	0965	SPRNK FIRE	0	0	0	0	80.00	UT	240.00	240.00	100	2006	2006	3	86	16,512	

TOTAL OB/XF 59,402

LAND DESCRIPTION

LN	USE CODE	CLS	LAND USE DESCRIPTION	CAP	RD	LOC ZONE	FRONT	DEPTH	TOT LND UTS	UNIT TYPE	DT	DPTH FACT	% COND	TOT ADJ	UNIT PRICE	ADJ UNIT PRICE	LAND VALUE	OTHER ADJUSTMENTS AND NOTES	YEAR	DENSITY	DECL	FRZ	YR	CONSRV
1	007100	C	CHURCH	0	0003	PUD	0.00	0.00	109,855.00	SF		1.00	1.00	1.00	12.00	12.00	1,318,260							

REVIEW DATE 02/03/2022 BY KK Total Acres: 0.00 Total Land Value: 1,318,260 Market: 0 Agricultural: 0 Common: 1,318,260 PRINTED 07/30/2025 BY SYS

PT GOVT LOT 2 OF SEC 22-2N-28E
IN OR 560/718, OR 568/1098 &
OR 1225/1723

AMELIA PLANTATION CHAPEL INC
36 BOWMAN ROAD
FERNANDINA BEACH, FL 32034

2025

01-6N-29-AICO-0003-0160

BUILDING CHARACTERISTICS

ELEMENT	CD	CONSTRUCTION
Exterior Wall	14	WD SHINGLE 100
Roof Structur	04	WOOD TRUSS 100
Roof Cover	03	COMP SHNGL 100
Interior Wall	05	DRYWALL 100
Interior Floo	14	CARPET 70
Interior Floo	11	CLAY TILE 30
Ceiling	01	FIN.SUSPD 100
Air Condition	03	CENTRAL 100
Heating Type	04	AIR DUCTED 100
Fixtures		19 100
Frame	03	MASONRY 100
Story Height		12 100
RMS		23 100
Stories	2.	2. 100
Units		0 100
Occupancy	00	NONE 100
Quality	04	Quality Level 04

DOR CODE	7100	CHURCHES	
MAP NUM		MKT AREA	10
NEIGHBORHOOD/LOC	10002.00		

AREA TYPE	TOTAL GROSS AREA	PCT OF BASE	YEAR	TOT ADJ AREA	SUBAREA MARKET VALUE
BAS	2,467	100	2006	2,467	372,440
BAS	3,986	100	2006	3,986	601,762
FEP	164	80	2013	131	19,777
FOP	1,368	30	2006	410	61,897
FUS	1,584	100	2007	1,584	239,135
PTO	16	5	2006	1	151
PTO	105	5	2006	5	755
STR	148	10	2006	15	2,265
UOP	143	20	2006	29	4,378
UOP	144	20	2006	29	4,378
TOTALS	10,470			8,795	1,327,772

MARKET ADJUSTMENTS

TYPE	MDL	EFF. AREA	TOT ADJ PTS	EFF. BASE RATE	REPL. COST NEW	AYB	EYB	ECON	FNCT		NORM	% COND
7101	04	8,795	106.1775	165.90	1,459,090	2006	2006	0	0	0	9.00	91.00

2 CHURCH – 0% - 0 Heated Area: 8168 HX Base Yr

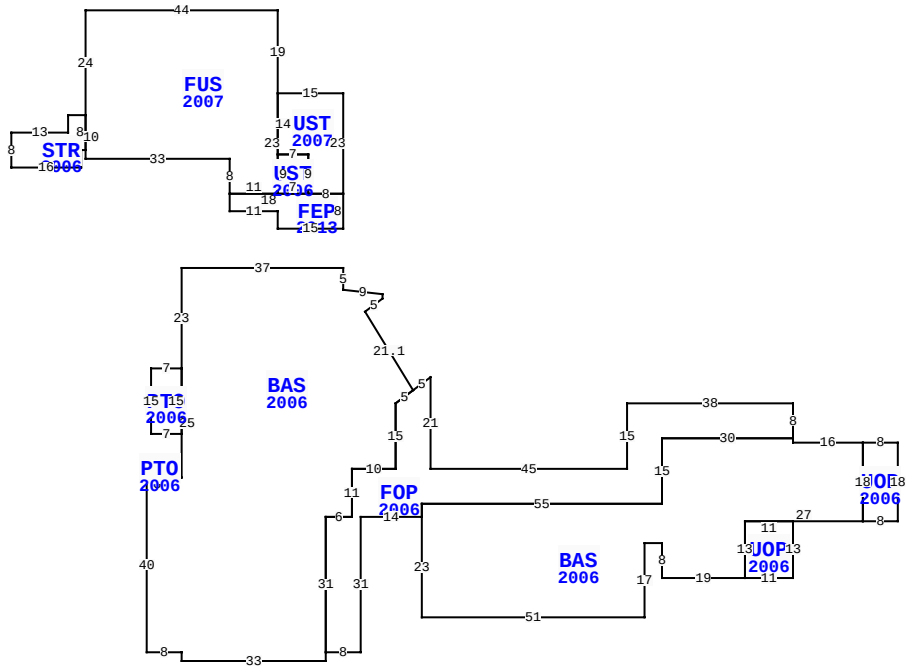

** This building has 12 Sub-Areas

36 BOWMAN RD, FERNANDINA BEACH

BLD DATE	02/03/2022	KK	LGL DATE	
XF DATE	02/03/2022	KK	LAND DATE	02/03/2022 KK
INC DATE			AG DATE	

NASSAU COUNTY PROPERTY

PAGE 2 of 2 5

VALUATION SUMMARY

VALUATION BY		STANDARD
Tax Group: 5	Tax Dist:	
BUILDING MARKET VALUE		2,549,977
TOTAL MARKET OB/XF VALUE		115,824
TOTAL LAND VALUE - MARKET		1,318,260
TOTAL MARKET VALUE		3,984,061
SOH/AGL Deduction		1,512,825
ASSESSED VALUE		2,471,236
TOTAL EXEMPTION VALUE	02	2,471,236
BASE TAXABLE VALUE		0
TOTAL JUST VALUE		3,984,061
NCON VALUE		0
INCOME VALUE		
PREVIOUS YEAR MKT VALUE		4,004,358

PERMIT NUM	DESCRIPTION	AMT	ISSUED
03366	H/AC	51,750	04/23/1990
3764	NEW CONSTR	19,888	01/09/1990
3801	NEW CONSTR	19,888	01/05/1990
6397	NEW CONSTR	70,000	01/02/1990
6165	NEW CONSTR	598,362	12/13/1989

SALES DATA

OFF RECORD Number	DATE	TYPE INST	Q U	V I	RSN CD	SALE PRICE
1225/1723	4/27/2004	QC	U	V	19	100
GRANTOR: AMELIA ISLAND COMPANY						
GRANTEE: AMELIA PLANTATION C						
0568/1098	5/01/1989	WD	Q	V		175,000
GRANTOR: DAYLIGHT INDUSTRIES						
GRANTEE: AMELIA PLANT CHAPEL						

BUILDING NOTES

BUILDING DIMENSIONS

BAS=[YR=2006] W37 S23 PTO=[YR=2006] W7 S15 E7 N15 $ S25 W3 PTO=[YR=2006] N4 W4 S4 E4 $ W5 S40 E8 S2 E33 N2 FOP=[YR=2006] E8 N31 E14 BAS=[YR=2006] S23 E51 N17 E4 S8 E19 UOP=[YR=2006] E11 N13 W11 S13 $ N13 E27 UOP=[YR=2006] E8 N18 W8 S18 $ N18 W16 N1 W30 S15 W55 S3 $ N3 E55 N15 E30 N8 W38 S15 W45 N21 L4 D3 D3 L4 S15 W10 S11 W6 S31 $ N31 E6 N11 E10 N15 R4 U3 L11 U18 R4 U3 N1 U1 L9 N5 $ PTR= N40 UST=[YR=2007] W15 FUS=[YR=2007] N19 W44 S24 STR=[YR=2006] W4 S4 W13 S8 E16 N4 E1 N8$ S10 E33 S8 FEP=[YR=2013] S4 E11 S4 E15 N8 W8 UST=[YR=2006] N9 W7 S9 E7$ W18$ E11 N23$ S14 E7 S9 E8 N23 $ S40$.

EXTRA FEATURES

LN	OB/XF CODE	DESCRIPTION	BLD	CAP	L	W	UNITS	UT	Adj R	ADJ UNIT PRICE	ORIG COND	YEAR ON	YEAR ACTUAL	Q	% COND	OB/XF MKT VALUE	NOTES
11	0803	ASPHALT C	0	0	0	0	1,486.00	SF	2.00	2.00	100	1990	1990	3	50	1,486	
12	1129	STONE 8"	0	0	0	0	544.00	SF	15.75	15.75	100	2008	2008	3	97	8,311	
13	0855	CONC PAVER	0	0	0	0	1,110.00	SF	10.00	10.00	100	2008	2008	3	88	9,768	
14	0803	ASPHALT C	0	0	0	0	30,086.00	SF	2.00	2.00	100	1990	1990	3	50	30,086	
15	0972	ST LGHT UN	0	0	0	0	9.00	UT	2,530.00	2,530.00	100	1990	1990	3	27	6,148	
16	0975	ST LT/ARM	0	0	0	0	2.00	UT	500.00	500.00	100	1990	1990	3	27	270	
17	0402	CONC BUMPE	0	0	0	0	17.00	UT	25.00	25.00	100	2000	2000	3	83	353	

LAND DESCRIPTION

TOTAL OB/XF 56,422

LN	USE CODE	CLS	LAND USE DESCRIPTION	CAP	RD	LOC ZONE	FRONT	DEPTH	TOT LND UTS	UNIT TYPE	DT	DPTH FACT	% COND	TOT ADJ	UNIT PRICE	ADJ UNIT PRICE	LAND VALUE	OTHER ADJUSTMENTS AND NOTES	YEAR	DENSITY	DECL	FRZ	YR	CONSRV

REVIEW DATE 02/03/2022 BY KK Total Acres: 0.00 Total Land Value: 1,318,260 Market: 0 Agricultural: 0 Common: 1,318,260 PRINTED 07/30/2025 BY SYS