PT GOVT LOT 2 OF SEC 22-2N-28E
IN OR 968/1444 & OR 1585/1503

AMELIA CAPITAL II LLC-AMELIA VILLAGE
3473 SATELLITE BLVD STE 211
DULUTH, GA 30096

2025

01-6N-29-AICO-0003-0150

NASSAU COUNTY PROPERTY

BUILDING CHARACTERISTICS

ELEMENT	CD	CONSTRUCTION
Exterior Wall	14	WD SHINGLE 100
Roof Structur	04	WOOD TRUSS 100
Roof Cover	03	COMP SHNGL 100
Interior Wall	05	DRYWALL 100
Interior Floo	14	CARPET 100
Ceiling	02	F.NOT SUS 100
Air Condition	03	CENTRAL 100
Heating Type	04	AIR DUCTED 100
Fixtures		5 100
Frame	02	WOOD FRAME 100
Story Height		8 100
RMS		6 100
Stories	1.5	1.5 100
Units		0 100
BUD8 Adjustme	05	DIST 1A 100
Occupancy	OO	OWNER OCC 100
Quality	04	Quality Level 04

DOR CODE 1700 OFFICE BUILDINGS
MAP NUM | MKT AREA 10
NEIGHBORHOOD/LOC 10002.00

AREA TYPE	TOTAL GROSS AREA	PCT OF BASE	YEAR	TOT ADJ AREA	SUBAREA MARKET VALUE
BAS	1,188	100	1993	1,188	62,637
DCK	135	10	1993	14	738
FOP	130	30	1993	39	2,056
FUS	160	100	1993	160	8,436
UOP	199	20	1993	40	2,109
TOTALS	1,812			1,441	75,977

MARKET ADJUSTMENTS

TYPE	MDL	EFF. AREA	TOT ADJ PTS	EFF. BASE RATE	REPL. COST NEW	AYB	EYB	ECON	FNCT		NORM	% COND
1701	04	1,441	98.7525	138.75	199,939	1983	1983	0	0	0	62.00	38.00

1 OFFICE – 0% - 0 Heated Area: 1348 HX Base Yr

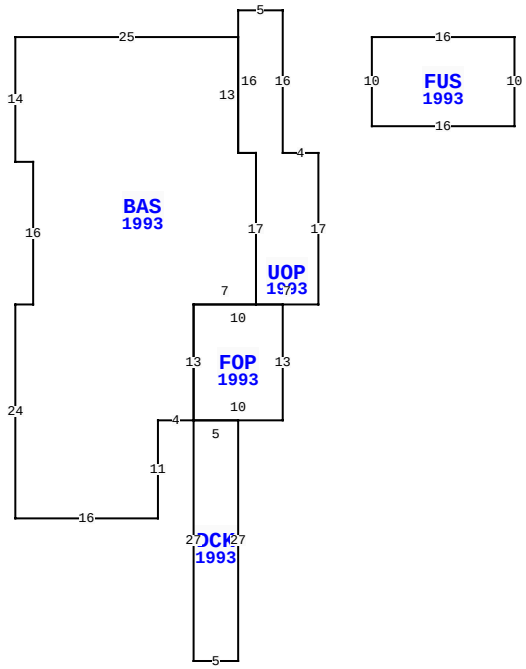

10 BOWMAN RD, FERNANDINA BEACH

BLD DATE	06/30/2021	KK	LGL DATE	
XF DATE	06/30/2021	KK	LAND DATE	06/30/2021 KK
INC DATE			AG DATE	

VALUATION SUMMARY

VALUATION BY	STANDARD
Tax Group: 5	Tax Dist:
BUILDING MARKET VALUE	75,977
TOTAL MARKET OB/XF VALUE	50
TOTAL LAND VALUE - MARKET	168,059
TOTAL MARKET VALUE	244,086
SOH/AGL Deduction	0
ASSESSED VALUE	244,086
TOTAL EXEMPTION VALUE	0
BASE TAXABLE VALUE	244,086
TOTAL JUST VALUE	244,086
NCON VALUE	0
INCOME VALUE	
PREVIOUS YEAR MKT VALUE	250,811

PERMIT NUM	DESCRIPTION	AMT	ISSUED

SALES DATA

OFF RECORD Number	DATE	TYPE INST	Q / U	V / I	RSN CD	SALE PRICE
0968/1444	1/30/2001	QC	U	I	07	100
GRANTOR: AMELIA ISLAND COMPANY						
GRANTEE: AMELIA CAPITAL CORP						
0646/0209	1/10/1992	WD	Q	I		180,000
GRANTOR: WAFCO						
GRANTEE: AMELIA CAPITAL CORP						

BUILDING NOTES

BUILDING DIMENSIONS

BAS=[YR=1993] W25 S14 E2 S16 W2 S24 E16 N11 E4 DCK=[YR=1993] S27 E5 N27 W5$ FOP=[YR=1993] E10 N13 W10 S13$ N13 E7 UOP=[YR=1993] E7 N17 W4 N16 W5 S16 E2 S17$ N17 W2 N13$ PTR= E15 FUS=[YR=1993] E16 S10 W16 N10$ W15$.

EXTRA FEATURES

LN	OB/XF CODE	DESCRIPTION	BLD	CAP	L	W	UNITS	UT	Adj R	ADJ UNIT PRICE	ORIG COND	YEAR ON	YEAR ACTUAL	Q	% COND	OB/XF MKT VALUE	NOTES
1	1242	WD DECK A	0	0	5	5	25.00	SF	10.00	10.00	100	2000	2000	3	20	50	

LAND DESCRIPTION

TOTAL OB/XF 50

LN	USE CODE	CLS	LAND USE DESCRIPTION	CAP	RD	LOC ZONE	FRONT	DEPTH	TOT LND UTS	UNIT TYPE	DT	DPTH FACT	% COND	TOT ADJ	UNIT PRICE	ADJ UNIT PRICE	LAND VALUE	OTHER ADJUSTMENTS AND NOTES	YEAR	DENSITY	DECL	FRZ	YR	CONSRV
1	001700	C	1STORY OFF	0	0006	PUD	0.00	0.00	2,800.99	SF		1.00	1.00	1.00	60.00	60.00	168,059							

REVIEW DATE 06/30/2021 BY KK Total Acres: 0.00 Total Land Value: 168,059 Market: 0 Agricultural: 0 Common: 168,059 PRINTED 07/30/2025 BY SYS