LOT 27
IN OR 1837/258
SWEETWATER OAKS PB 5/75 & 76

BOYLE RICHARD M & MARTHA E
11 MOSS OAKS DR
FERNANDINA BEACH, FL 32034

2025

01-6N-29-2000-0027-0000

NASSAU COUNTY PROPERTY

PAGE 1 of 1 5

BUILDING CHARACTERISTICS

ELEMENT	CD	CONSTRUCTION
Exterior Wall	16	WD FR STUC 100
Roof Structur	08	IRREGULAR 100
Roof Cover	03	COMP SHNGL 100
Interior Wall	05	DRYWALL 100
Interior Floo	12	HARDWOOD 70
Interior Floo	11	CLAY TILE 30
Air Condition	03	CENTRAL 100
Heating Type	04	AIR DUCTED 100
Bedrooms		4 100
Bathrooms		3.5 100
Frame	02	WOOD FRAME 100
Stories	1.	1. 100
Units		0 100
Quality	04	Quality Level 04
DOR CODE	0100	SINGLE FAMILY
MAP NUM		MKT AREA 10
NEIGHBORHOOD/LOC	10001.00	

AREA TYPE	TOTAL GROSS AREA	PCT OF BASE	YEAR	TOT ADJ AREA	SUBAREA MARKET VALUE
BAS	3,033	100	2016	3,033	632,708
DCK	160	10	2016	16	3,338
FEP	308	80	2016	246	51,318
FGR	1,262	55	2016	694	144,774
FOP	117	30	2016	35	7,302
FOP	456	30	2016	137	28,579
STR	44	10	2016	4	834
UOP	770	20	2016	154	32,125
UUS	282	50	2016	141	29,413
TOTALS	6,432			4,460	930,392

MARKET ADJUSTMENTS

TYPE	MDL	EFF. AREA	TOT ADJ PTS	EFF. BASE RATE	REPL. COST NEW	AYB	EYB	ECON	FNCT		NORM	% COND
0500	11	4,460	137.5334	217.30	969,158	2016	2016	0	0	0	4.00	96.00

1 SFR CUST – 100% - 2017 Heated Area: 3033 HX Base Yr 2017

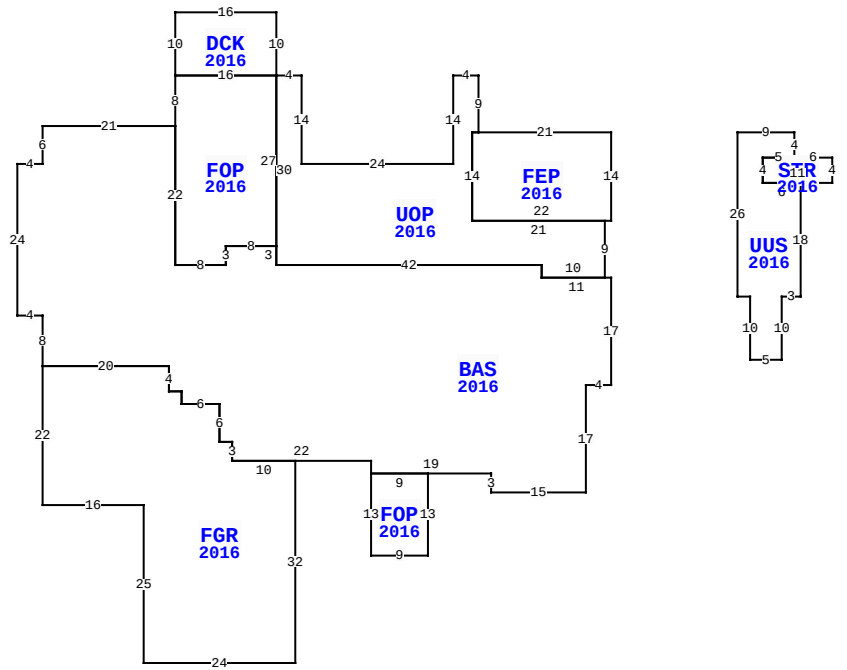

11 MOSS OAKS DR, FERNANDINA BEACH

BLD DATE		LGL DATE	
XF DATE		LAND DATE	
INC DATE		AG DATE	

VALUATION SUMMARY

VALUATION BY		STANDARD
Tax Group: 5	Tax Dist:	
BUILDING MARKET VALUE		930,392
TOTAL MARKET OB/XF VALUE		42,092
TOTAL LAND VALUE - MARKET		450,000
TOTAL MARKET VALUE		1,422,484
SOH/AGL Deduction		764,625
ASSESSED VALUE		657,859
TOTAL EXEMPTION VALUE	HX HB	50,722
BASE TAXABLE VALUE		607,137
TOTAL JUST VALUE		1,422,484
NCON VALUE		0
INCOME VALUE		
PREVIOUS YEAR MKT VALUE		1,381,018

PERMIT NUM	DESCRIPTION	AMT	ISSUED
B1631301	CO ISSUED	0	07/13/2016
B1531301	SWIM POOL	0	10/20/2015
B1530720	NEW CONSTR	411,199	07/01/2015

SALES DATA

OFF RECORD Number	DATE	TYPE INST	Q / U	V / I	RSN CD	SALE PRICE
1837/0258	1/25/2013	WD	U	V	12	115,000
GRANTOR: FIRST-CITIZENS BANK &						
GRANTEE: BOYLE RICHARD M & M						
1739/1434	5/10/2011	CT	U	V	18	100
GRANTOR: CLERK OF COURT						
GRANTEE: IRONSTONE BANK						

BUILDING NOTES

BUILDING DIMENSIONS

FEP=[YR=2016] W21 UOP=[YR=2016] N9 W4 S14 W24 N14 W4
DCK=[YR=2016] N10 W16 S10 FOP=[YR=2016] S8 BAS=[YR=2016] W21
S6 W4 S24 E4 S8 FGR=[YR=2016] S22 E16 S25 E24 N32 W10 N3 W2
N6 W6 N2 W2 N4 W20$ E20 S4 E2 S2 E6 S6 E2 S3 E22 S2
FOP=[YR=2016] S13 E9 N13 W9$ E19 S3 E15 N17 E4 N17 W11 N2 W42
N3 W8 S3 W8 N22$ S22 E8 N3 E8 N27 W16$ E16$ S30 E42 S2 E10 N9
W21 N14 E1$ W1 S14 E22 N14$ PTR=E20 UUS=[YR=2016] E9 S4
STR=[YR=2016] E6 S4 W11 N4E5$ W5 S4 E6 S18 W3 S10 W5 N10 W2
N26$ W20$.

EXTRA FEATURES

LN	OB/XF CODE	DESCRIPTION	BLD	CAP	L	W	UNITS	UT	Adj R	ADJ UNIT PRICE	ORIG COND	YEAR ON	YEAR ACTUAL	Q	% COND	OB/XF MKT VALUE	NOTES
1	0504	FP-ELECTRI	0	100	0	0	2.00	UT	2,000.00	2,000.00	100	2016	2016	3	97	3,880	
2	0861	POOL GUNIT	0	100	0	0	336.00	SF	85.00	85.00	100	2016	2016	3	78	22,277	
3	0812	CONCRETE C	0	100	0	0	3,397.00	SF	4.00	4.00	100	2016	2016	3	95	12,909	
4	0811	CONCRETE B	0	100	0	0	440.00	SF	5.20	5.20	100	2016	2016	3	95	2,174	
5	1242	WD DECK A	0	100	6	4	24.00	SF	10.00	10.00	100	2016	2016	3	70	168	
6	0855	CONC PAVER	0	100	9	8	72.00	SF	10.00	10.00	100	2016	2016	3	95	684	

LAND DESCRIPTION

TOTAL OB/XF 42,092

LN	USE CODE	CLS	LAND USE DESCRIPTION	CAP	RD	LOC ZONE	FRONT	DEPTH	TOT LND UTS	UNIT TYPE	DT	DPTH FACT	% COND	TOT ADJ	UNIT PRICE	ADJ UNIT PRICE	LAND VALUE	OTHER ADJUSTMENTS AND NOTES	YEAR	DENSITY	DECL	FRZ	YR	CONSRV
1	000100	C	RES	100		RSF-1	0.00	0.00	1.00	UT		1.00	1.00	1.00	450,000.00	450,000.00	450,000							

REVIEW DATE 05/12/2019 BY KBA Total Acres: 0.00 Total Land Value: 450,000 Market: 0 Agricultural: 0 Common: 450,000 PRINTED 07/30/2025 BY SYS