LOT 22
SWEETWATER OAKS PB 5/75 & 76

PARKER FREDERICK S & AMY C
14 MOSS OAKS DR
FERNANDINA BEACH, FL 32034

2025

01-6N-29-2000-0022-0000

BUILDING CHARACTERISTICS

ELEMENT	CD	CONSTRUCTION
Exterior Wall	12	CEDAR 100
Roof Structur	08	IRREGULAR 100
Roof Cover	03	COMP SHNGL 100
Interior Wall	05	DRYWALL 100
Interior Floo	12	HARDWOOD 60
Interior Floo	14	CARPET 40
Air Condition	03	CENTRAL 100
Heating Type	04	AIR DUCTED 100
Bedrooms		4 100
Bathrooms		5 100
Frame	02	WOOD FRAME 100
Stories	2.	2. 100
Units		0 100
Quality	04	Quality Level 04
DOR CODE	0100	SINGLE FAMILY
MAP NUM		MKT AREA 10
NEIGHBORHOOD/LOC	10001.00	

AREA TYPE	TOTAL GROSS AREA	PCT OF BASE	YEAR	TOT ADJ AREA	SUBAREA MARKET VALUE
BAS	2,489	100	2006	2,489	381,334
FGR	775	55	2006	426	65,266
FOP	192	30	2006	58	8,886
FOP	192	30	2006	58	8,886
FOP	240	30	2006	72	11,031
FOP	592	30	2006	178	27,271
FUS	425	100	2006	425	65,113
FUS	960	100	2006	960	147,080
PTO	156	5	2006	8	1,226
UOP	52	20	2006	10	1,532
TOTALS	6,719			4,813	737,388

MARKET ADJUSTMENTS

TYPE	MDL	EFF. AREA	TOT ADJ PTS	EFF. BASE RATE	REPL. COST NEW	AYB	EYB	ECON	FNCT		NORM	% COND
0500	01	4,813	106.5540	168.36	810,317	2006	2006	0	0	0	9.00	91.00

1 SFR CUST – 100% - 2025 Heated Area: 3874 HX Base Yr 2025

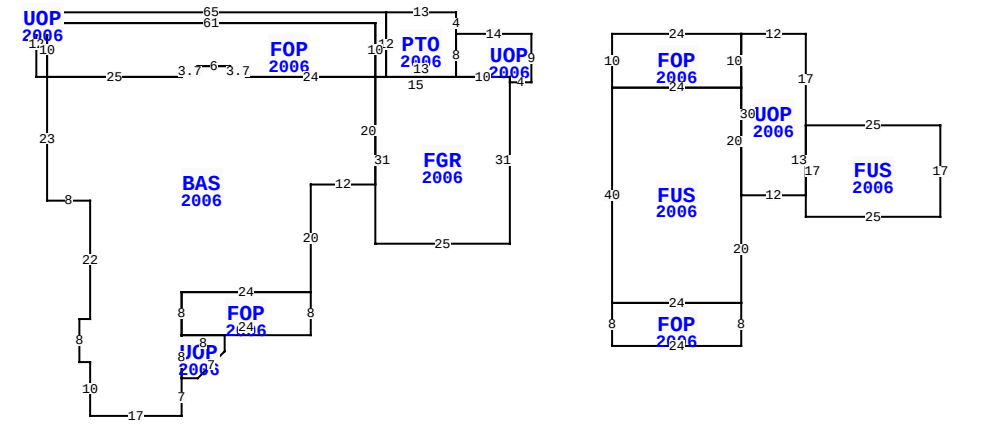

** This building has 13 Sub-Areas

14 MOSS OAKS DR, FERNANDINA BEACH

BLD DATE		LGL DATE	
XF DATE		LAND DATE	
INC DATE		AG DATE	

NASSAU COUNTY PROPERTY

PAGE 1 of 1 5

VALUATION SUMMARY

VALUATION BY		STANDARD
Tax Group: 5	Tax Dist:	
BUILDING MARKET VALUE		737,388
TOTAL MARKET OB/XF VALUE		17,762
TOTAL LAND VALUE - MARKET		405,000
TOTAL MARKET VALUE		1,160,150
SOH/AGL Deduction		0
ASSESSED VALUE		1,160,150
TOTAL EXEMPTION VALUE	HX HB	50,722
BASE TAXABLE VALUE		1,109,428
TOTAL JUST VALUE		1,160,150
NCON VALUE		0
INCOME VALUE		
PREVIOUS YEAR MKT VALUE		1,293,349

PERMIT NUM	DESCRIPTION	AMT	ISSUED
B240014141	EXPAND SNRM	65,000	12/26/2024
M10415	MECH OTHER	0	10/01/2005
P09671	OTHER	0	07/01/2005
E0515043	ELEC OTHER	2,500	05/01/2005
C15077	CO ISSUED	525,000	04/01/2005
R07527	REPAIR/RRF	7,500	04/01/2005

SALES DATA

OFF RECORD Number	DATE	TYPE INST	Q / U	V / I	RSN CD	SALE PRICE
2715/1091	5/31/2024	WD	Q	I	01	1,425,000
GRANTOR: SWAGER ALAN R & MARJO						
GRANTEE: PARKER FREDERICK S						
2285/1609	6/28/2019	WD	Q	I	02	975,000
GRANTOR: CARVALHO ROBERT & MIC						
GRANTEE: SWAGER ALAN R & MAR						

BUILDING NOTES

BUILDING DIMENSIONS

UOP=[YR=2006] W14 PTO=[YR=2006] N4 W13 UOP=[YR=2006] W65 S12 E2 FOP=[YR=2006] E25 U2 R3 E6 R3 D2 E24 N10 W61 S10 $ N10 E61 S10 E2 N12 $ S12 E13 N8 $ S8 FGR=[YR=2006] W15 BAS=[YR=2006] W24 U2 L3 W6 L3 D2 W25 S23 E8 S22 W2 S8 E2 S10 E17 N7 UOP=[YR=2006] E3 R5 U5 N3 W8 S8 $ N8 FOP=[YR=2006] E24 N8 W24 S8 $ N8 E24 N20 E12 N20 $ S31 E25 N31 W10 $ E10 S1 E4 N9 $ PTR= E15 FOP=[YR=2006] E24 UOP=[YR=2006] E12 S17 FUS=[YR=2006] E25 S17 W25 N17 $ S13 W12 FUS=[YR=2006] S20 FOP=[YR=2006] S8 W24 N8 E24 $ W24 N40 E24 S20 $ N30 $ S10 W24 N10 $ W15 $.

EXTRA FEATURES

LN	OB/XF CODE	DESCRIPTION	BLD	CAP	L	W	UNITS	UT	Adj R	ADJ UNIT PRICE	ORIG COND	YEAR ON	YEAR ACTUAL	Q	% COND	OB/XF MKT VALUE	NOTES
1	0500	FP-PRE FAB	0	100	0	0	1.00	UT	3,500.00	3,500.00	100	2006	2006	3	89	3,115	
2	0812	CONCRETE C	0	100	0	0	3,016.00	SF	4.00	4.00	100	2006	2006	3	86	10,375	
3	0825	BRICK	0	100	0	0	152.00	SF	12.50	12.50	100	2006	2006	3	96	1,824	
4	0462	ST/AL FNC	0	100	0	0	612.00	SF	10.00	10.00	100	2006	2006	3	40	2,448	

LAND DESCRIPTION

TOTAL OB/XF 17,762

LN	USE CODE	CLS	LAND USE DESCRIPTION	CAP	RD	LOC ZONE	FRONT	DEPTH	TOT LND UTS	UNIT TYPE	DT	DPTH FACT	% COND	TOT ADJ	UNIT PRICE	ADJ UNIT PRICE	LAND VALUE	OTHER ADJUSTMENTS AND NOTES	YEAR	DENSITY	DECL	FRZ	YR	CONSRV
1	000100	C	RES	100		RSF-1	0.00	0.00	1.00	UT		1.00	1.00	0.90	450,000.00	405,000.00	405,000							

REVIEW DATE 05/12/2019 BY KBA Total Acres: 0.00 Total Land Value: 405,000 Market: 0 Agricultural: 0 Common: 405,000 PRINTED 07/30/2025 BY SYS