LOT 19
SWEETWATER OAKS PB 5/75 & 76

VOLKMAR NEIL J LIVING TRUST/VOLKMAR ROBIN G LIVING
8 MOSS OAKS DR
FERNANDINA BEACH, FL 32034

2025

01-6N-29-2000-0019-0000

NASSAU COUNTY PROPERTY

BUILDING CHARACTERISTICS

ELEMENT	CD	CONSTRUCTION
Exterior Wall	10	ABOVE AVG 100
Roof Structur	08	IRREGULAR 100
Roof Cover	03	COMP SHNGL 100
Interior Wall	05	DRYWALL 100
Interior Floo	12	HARDWOOD 70
Interior Floo	14	CARPET 30
Air Condition	03	CENTRAL 100
Heating Type	04	AIR DUCTED 100
Bedrooms		5 100
Bathrooms		4 100
Frame	02	WOOD FRAME 100
Stories	2.	2. 100
Units		0 100
Quality	04	Quality Level 04
DOR CODE	0100	SINGLE FAMILY
MAP NUM		MKT AREA 10
NEIGHBORHOOD/LOC	10001.00	

AREA TYPE	TOTAL GROSS AREA	PCT OF BASE	YEAR	TOT ADJ AREA	SUBAREA MARKET VALUE
BAS	2,310	100	2019	2,310	475,738
FGR	775	55	2019	426	87,734
FOP	138	30	2019	41	8,444
FOP	285	30	2019	86	17,712
FOP	333	30	2019	100	20,595
FUS	1,081	100	2019	1,081	222,629
PTO	9	5	2019	0	0
PTO	40	5	2019	2	412
STR	77	10	2019	8	1,647
TOTALS	5,048			4,054	834,909

MARKET ADJUSTMENTS

TYPE	MDL	EFF. AREA	TOT ADJ PTS	EFF. BASE RATE	REPL. COST NEW	AYB	EYB	ECON	FNCT		NORM	% COND
0500	11	4,054	133.0032	210.15	851,948	2019	2019	0	0	0	2.00	98.00

1 SFR CUST – 100% - 2022 Heated Area: 3391 HX Base Yr 2022

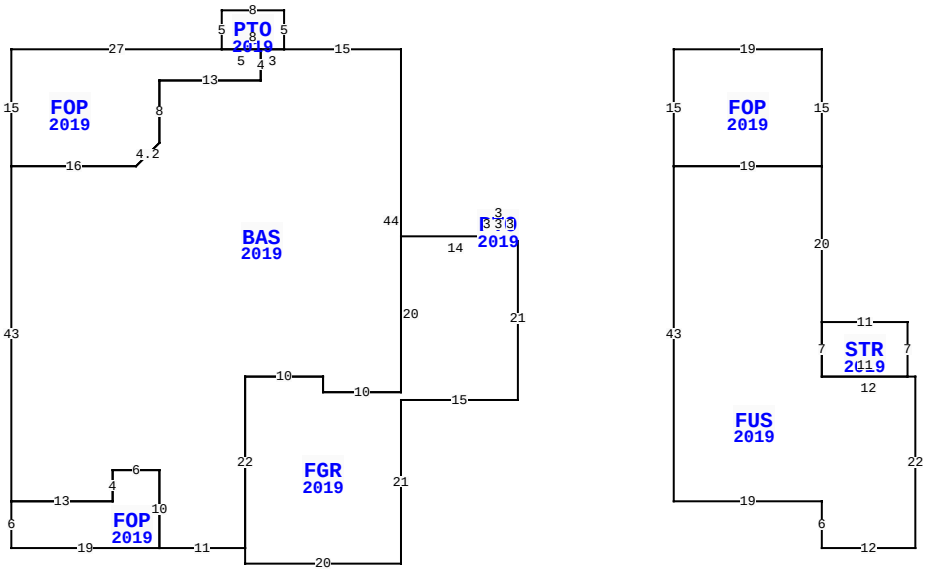

8 MOSS OAKS DR, FERNANDINA BEACH

BLD DATE		LGL DATE	
XF DATE		LAND DATE	
INC DATE		AG DATE	

NASSAU COUNTY PROPERTY — VALUATION SUMMARY

VALUATION BY		STANDARD
Tax Group: 5	Tax Dist:	
BUILDING MARKET VALUE		834,909
TOTAL MARKET OB/XF VALUE		25,408
TOTAL LAND VALUE - MARKET		450,000
TOTAL MARKET VALUE		1,310,317
SOH/AGL Deduction		130,879
ASSESSED VALUE		1,179,438
TOTAL EXEMPTION VALUE	HX HB	50,722
BASE TAXABLE VALUE		1,128,716
TOTAL JUST VALUE		1,310,317
NCON VALUE		0
INCOME VALUE		
PREVIOUS YEAR MKT VALUE		1,272,467

PERMIT NUM	DESCRIPTION	AMT	ISSUED
B1800813	NEW CONSTR	447,266	01/24/2018

SALES DATA

OFF RECORD Number	DATE	TYPE INST	Q / U	V / I	RSN CD	SALE PRICE
2498/0687	9/21/2021	WD	Q	I	01	1,405,000
GRANTOR: PREVATTE LARRY & THER						
GRANTEE: VOLKMAR NEIL J LIVI						
2317/1958	11/07/2019	SW	Q	I	01	919,000
GRANTOR: ARTISAN HOMES LLC						
GRANTEE: PREVATTE LARRY & TH						

BUILDING NOTES

BUILDING DIMENSIONS

BAS=[YR=2019] W15 PTO=[YR=2019] N5 W8 S5 FOP=[YR=2019] W27 S15 E16 U3 R3 N8 E13 N4 W5$ E8$ W3 S4 W13 S8 D3 L3 W16 S43 FOP=[YR=2019] S6 E19 N10 W6 S4 W13$ E13 N4 E6 S10 E11FGR=[YR=2019] S2 E20 N21 E15 N21 W1 PTO=[YR=2019] N3W3S3E3$ W14 S20 W10 N2 W10 S22$ N22 E10 S2 E10 N44$ PTR=E35 FOP=[YR=2019] E19 S15 FUS=[YR=2019] S20 STR=[YR=2019] E11 S7 W11 N7$ S7 E12 S22 W12 N6 W19 N43 E19$ W19 N15$ W35$.

EXTRA FEATURES

LN	OB/XF CODE	DESCRIPTION	BLD	CAP	L	W	UNITS	UT	Adj R	ADJ UNIT PRICE	ORIG COND	YEAR ON	YEAR ACTUAL	Q	% COND	OB/XF MKT VALUE	NOTES
1	0500	FP-PRE FAB	0	100	0	0	1.00	UT	3,500.00	3,500.00	100	2019	2019	3	98	3,430	
2	0855	CONC PAVER	0	100	0	0	1,675.00	SF	10.00	10.00	100	2019	2019	3	97	16,248	
3	0855	CONC PAVER	0	100	0	0	168.00	SF	10.00	10.00	100	2019	2019	3	97	1,630	
4	0600	SUMMER KIT	0	100	0	0	1.00	UT	5,000.00	5,000.00	100	2019	2019	3	82	4,100	

LAND DESCRIPTION

TOTAL OB/XF 25,408

LN	USE CODE	CLS	LAND USE DESCRIPTION	CAP	RD	LOC ZONE	FRONT	DEPTH	TOT LND UTS	UNIT TYPE	DT	DPTH FACT	% COND	TOT ADJ	UNIT PRICE	ADJ UNIT PRICE	LAND VALUE	OTHER ADJUSTMENTS AND NOTES	YEAR	DENSITY	DECL	FRZ	YR	CONSRV
1	000100	C	RES	100		RSF-1	0.00	0.00	1.00	UT		1.00	1.00	1.00	450,000.00	450,000.00	450,000							

REVIEW DATE 07/29/2019 BY DJ Total Acres: 0.00 Total Land Value: 450,000 Market: 0 Agricultural: 0 Common: 450,000 PRINTED 07/30/2025 BY SYS