LOT 81
SEA MARSH VILLAGE UNIT 1A
PB 4/38

BIGOSINSKI JACEK & HANNA
41 SEA MARSH ROAD
FERNANDINA BEACH, FL 32034

2025

01-6N-29-191A-0081-0000

BUILDING CHARACTERISTICS

ELEMENT	CD	CONSTRUCTION
Exterior Wall	12	CEDAR 100
Roof Structur	08	IRREGULAR 100
Roof Cover	03	COMP SHNGL 100
Interior Wall	05	DRYWALL 80
Interior Wall	08	DECORATIVE 20
Interior Floo	14	CARPET 80
Interior Floo	12	HARDWOOD 20
Air Condition	03	CENTRAL 100
Heating Type	04	AIR DUCTED 100
Bedrooms		3 100
Bathrooms		3.5 100
Frame	02	WOOD FRAME 100
Stories	2.	2. 100
Units		0 100
BUD8 Adjustme	05	DIST 1A 100
Occupancy	00	NONE 100
Quality	04	Quality Level 04
DOR CODE	0100	SINGLE FAMILY
MAP NUM		MKT AREA 10
NEIGHBORHOOD/LOC	10001.00	

AREA TYPE	TOTAL GROSS AREA	PCT OF BASE	YEAR	TOT ADJ AREA	SUBAREA MARKET VALUE
BAS	2,665	100	1993	2,665	364,653
FGR	631	55	1993	347	47,480
FOP	70	30	1993	21	2,874
FST	114	55	1993	63	8,620
FUS	669	100	1993	669	91,539
UOP	1,716	20	1993	343	46,933
TOTALS	5,865			4,108	562,099

MARKET ADJUSTMENTS

TYPE	MDL	EFF. AREA	TOT ADJ PTS	EFF. BASE RATE	REPL. COST NEW	AYB	EYB	ECON	FNCT		NORM	% COND
0500	01	4,108	106.2600	167.89	689,692	1987	1987	0	0	0	18.50	81.50

1 SFR CUST – 100% - 2022 Heated Area: 3334 HX Base Yr 2022

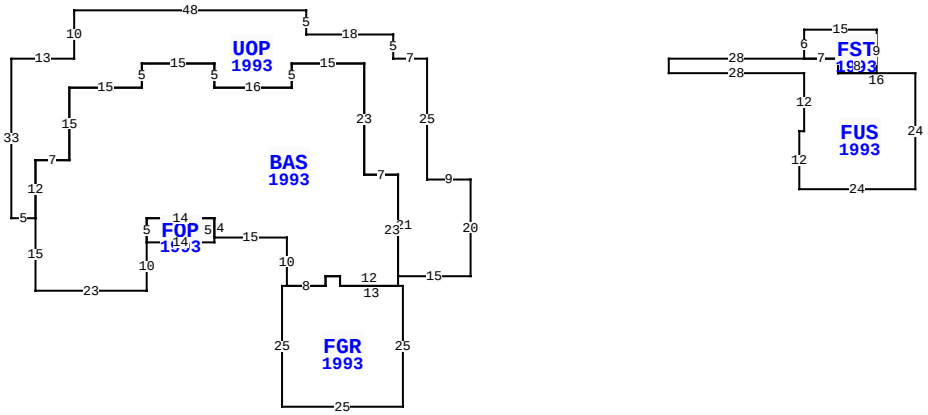

41 SEA MARSH RD, FERNANDINA BEACH

BLD DATE		LGL DATE	
XF DATE		LAND DATE	05/07/2025 MLU
INC DATE		AG DATE	

NASSAU COUNTY PROPERTY

PAGE 1 of 1 5

VALUATION SUMMARY

VALUATION BY		STANDARD
Tax Group: 5	Tax Dist:	
BUILDING MARKET VALUE		562,099
TOTAL MARKET OB/XF VALUE		19,362
TOTAL LAND VALUE - MARKET		700,000
TOTAL MARKET VALUE		1,281,461
SOH/AGL Deduction		309,131
ASSESSED VALUE		972,330
TOTAL EXEMPTION VALUE	HX HB	50,722
BASE TAXABLE VALUE		921,608
TOTAL JUST VALUE		1,281,461
NCON VALUE		0
INCOME VALUE		
PREVIOUS YEAR MKT VALUE		1,206,535

PERMIT NUM	DESCRIPTION	AMT	ISSUED
B22185	REMODEL	102,000	01/01/2009
B950400	REPAIR/RRF	4,800	10/01/1995
B874198	NEW CONSTR	219,264	06/24/1987

SALES DATA

OFF RECORD Number	DATE	TYPE INST	Q U	V I	RSN CD	SALE PRICE
2438/0104	2/26/2021	WD	Q	I	01	995,000
GRANTOR: SHEPPARD DAVID R & CA						
GRANTEE: BIGOSINSKI JACEK &						
1597/0406	12/15/2008	WD	Q	I		830,000
GRANTOR: LACKEY DOROTHY D & AN						
GRANTEE: SHEPPARD DAVID R &						

BUILDING NOTES

EXTRA FEATURES

LN	OB/XF CODE	DESCRIPTION	BLD	CAP	L	W	UNITS	UT	Adj R	ADJ UNIT PRICE	ORIG COND	YEAR ON	YEAR ACTUAL	Q	% COND	OB/XF MKT VALUE	NOTES
1	0504	FP-ELECTRI	0	100	0	0	1.00	UT	2,000.00	2,000.00	100	1987	1987	3	60	1,200	
2	0810	CONCRETE A	0	100	0	0	124.00	SF	6.50	6.50	100	1987	1987	3	49.5	399	
3	1242	WD DECK A	0	100	0	0	56.00	SF	10.00	10.00	100	1987	1987	3	20	112	
4	0445	BOX FNC 5'	0	100	0	0	26.00	LF	8.10	8.10	100	1987	1987	3	20	42	
5	0855	CONC PAVER	0	100	0	0	2,638.00	SF	7.50	7.50	100	2009	2009	3	89	17,609	

BUILDING DIMENSIONS

UOP=[YR=1993] W7 N5 W18 N5 W48 S10 W13 S33 E5 BAS=[YR=1993] S15 E23 N10 FOP=[YR=1993] E14 N5 W14 S5$ N5 E14 S4 E15 S10 FGR=[YR=1993] W1 S25 E25 N25 W13 N2 W3 S2 W8$ E8 N2 E3 S2 E12 N23 W7 N23 W15 S5 W16 N5 W15 S5 W15 S15 W7 S12$ N12 E7 N15 E15 N5 E15 S5 E16 N5 E15 S23 E7 S21 E15 N20 W9 N25$ PTR=E50 FUS=[YR=1993] E28 FST=[YR=1993] N6 E15 S9 W8 N3 W7$ E7 S3 E16 S24 W24 N12 E1 N12 W28 N3$ W50$.

LAND DESCRIPTION

TOTAL OB/XF 19,362

LN	USE CODE	CLS	LAND USE DESCRIPTION	CAP	RD	LOC ZONE	FRONT	DEPTH	TOT LND UTS	UNIT TYPE	DT	DPTH FACT	% COND	TOT ADJ	UNIT PRICE	ADJ UNIT PRICE	LAND VALUE	OTHER ADJUSTMENTS AND NOTES	YEAR	DENSITY	DECL	FRZ	YR	CONSRV
1	000140	C	RES GOLF	100		RSF-1	0.00	0.00	1.00	LT		1.00	1.00	1.00	700,000.00	700,000.00	700,000							

REVIEW DATE 11/01/2019 BY DJA Total Acres: 0.00 Total Land Value: 700,000 Market: 0 Agricultural: 0 Common: 700,000 PRINTED 07/30/2025 BY SYS