LOT 75
IN OR 2159/300
SEA MARSH VILLAGE UNIT 1A

MATHE GERALD E & JILL M
53 SEA MARSH RD
FERNANDINA BEACH, FL 32034

2025

01-6N-29-191A-0075-0000

BUILDING CHARACTERISTICS

ELEMENT	CD	CONSTRUCTION
Exterior Wall	12	CEDAR 90
Exterior Wall	16	WD FR STUC 10
Roof Structur	08	IRREGULAR 100
Roof Cover	03	COMP SHNGL 100
Interior Wall	05	DRYWALL 100
Interior Floo	12	HARDWOOD 60
Interior Floo	14	CARPET 40
Air Condition	03	CENTRAL 100
Heating Type	04	AIR DUCTED 100
Bedrooms		4 100
Bathrooms		3.5 100
Frame	02	WOOD FRAME 100
Stories	2.	2. 100
Units		0 100
BUD8 Adjustme	05	DIST 1A 100
Occupancy	00	NONE 100
Quality	04	Quality Level 04
DOR CODE	0100	SINGLE FAMILY
MAP NUM		MKT AREA 10
NEIGHBORHOOD/LOC	10001.00	

AREA TYPE	TOTAL GROSS AREA	PCT OF BASE	YEAR	TOT ADJ AREA	SUBAREA MARKET VALUE
BAS	2,013	100	1993	2,013	276,403
BAS	283	100	2002	283	38,858
BAS	484	100	2004	484	66,458
DCK	49	10	1993	5	686
DCK	3	10	2002	0	0
FGR	583	55	1993	321	44,076
FOP	18	30	1993	5	686
FOP	70	30	1993	21	2,883
FSP	904	40	2020	362	49,706
FUS	944	100	1993	944	129,620
TOTALS	5,351			4,438	609,377

MARKET ADJUSTMENTS

TYPE	MDL	EFF. AREA	TOT ADJ PTS	EFF. BASE RATE	REPL. COST NEW	AYB	EYB	ECON	FNCT		NORM	% COND
0500	01	4,438	105.9828	167.45	743,143	1988	1988	0	0	0	18.00	82.00

1 SFR CUST – 100% - 2020 Heated Area: 3724 HX Base Yr 2020

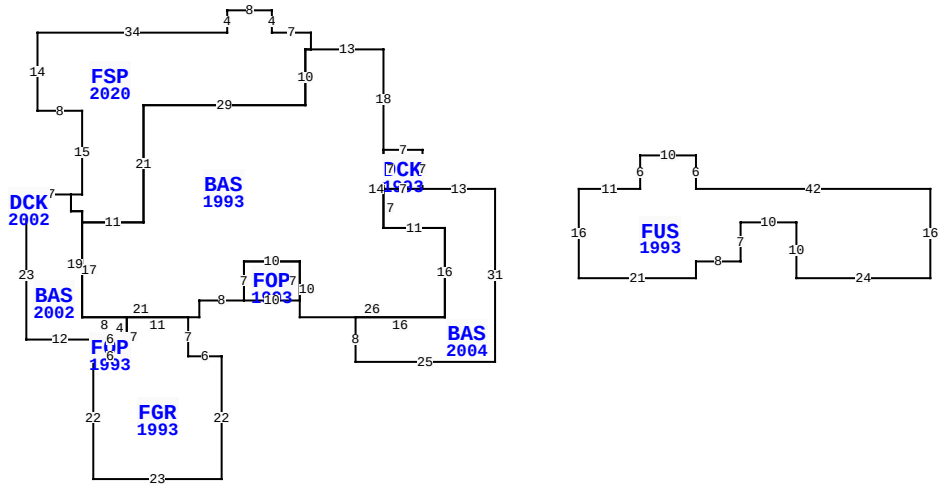

53 SEA MARSH RD, FERNANDINA BEACH

BLD DATE		LGL DATE	
XF DATE		LAND DATE	05/07/2025 MLU
INC DATE		AG DATE	

NASSAU COUNTY PROPERTY

PAGE 1 of 1 5

VALUATION SUMMARY

VALUATION BY		STANDARD
Tax Group: 5	Tax Dist:	
BUILDING MARKET VALUE		609,377
TOTAL MARKET OB/XF VALUE		28,456
TOTAL LAND VALUE - MARKET		700,000
TOTAL MARKET VALUE		1,337,833
SOH/AGL Deduction		596,035
ASSESSED VALUE		741,798
TOTAL EXEMPTION VALUE	HX HB	50,722
BASE TAXABLE VALUE		691,076
TOTAL JUST VALUE		1,337,833
NCON VALUE		0
INCOME VALUE		
PREVIOUS YEAR MKT VALUE		1,261,186

PERMIT NUM	DESCRIPTION	AMT	ISSUED
2000050	SCRNRM	16,301	01/03/2020
R035234	REPAIR/RRF	1,500	07/01/2003
E017827	REMODEL	0	03/01/2001
M014922	SIGNS	200	03/01/2001
P014575	REMODEL	2,000	03/01/2001
B0007701	ADDITION	75,000	11/01/2000

SALES DATA

OFF RECORD Number	DATE	TYPE INST	Q / U	V / I	RSN CD	SALE PRICE
2159/0300	11/09/2017	WD	U	I	11	100
GRANTOR: ESPOSITO JOHN J & FRA						
GRANTEE: MATHE GERALD E & JI						
2156/1894	11/09/2017	WD	Q	I	02	830,000
GRANTOR: ESPOSITO JOHN J & FRA						
GRANTEE: MATHE GERALD E & JI						

BUILDING NOTES

BUILDING DIMENSIONS

BAS=[YR=2004] W13 DCK=[YR=1993] N7 W7 BAS=[YR=1993] N18 W13 FSP=[YR=2020] N3 W7 N4 W8 S4 W34 S14 E8 S15 W2 BAS=[YR=2002] W7 DCK=[YR=2002] W1 S3 E1 N3 $ S3 W1 S23 E12 FOP=[YR=1993] S3 FGR=[YR=1993] S22 E23 N22 W6 N7 W11 S7 W6 $ E6 N3 W6 $ E6 N4 W8 N19 W2 N3 $ S3 E2 S2 E11 N21 E29 N10 E1 $ W1 S10 W29 S21 W11 S17 E21 N3 E8 FOP=[YR=1993] E10 N7 W10 S7 $ N7 E10 S10 E26 N16 W11 N14 $ S7 E7 $ W7 S7 E11 S16 W16 S8 E25 N31 $ PTR= E15 FUS=[YR=1993] E11 N6 E10 S6 E42 S16 W24 N10 W10 S7 W8 S3 W21 N16 $ W15 $.

EXTRA FEATURES

LN	OB/XF CODE	DESCRIPTION	BLD	CAP	L	W	UNITS	UT	Adj R	ADJ UNIT PRICE	ORIG COND	YEAR ON	YEAR ACTUAL	Q	% COND	OB/XF MKT VALUE	NOTES
1	0504	FP-ELECTRI	0	100	0	0	1.00	UT	2,000.00	2,000.00	100	1988	1988	3	62	1,240	
2	0810	CONCRETE A	0	100	7	4	28.00	SF	6.50	6.50	100	2004	2004	3	83	151	
3	0810	CONCRETE A	0	100	8	3	24.00	SF	6.50	6.50	100	2004	2004	3	83	129	
4	0444	BOX FNC 4'	0	100	0	0	16.00	LF	6.50	6.50	100	2004	2004	3	21	22	
5	0855	CONC PAVER	0	100	0	0	3,204.00	SF	10.00	10.00	100	2005	2005	3	84	26,914	

LAND DESCRIPTION

TOTAL OB/XF 28,456

LN	USE CODE	CLS	LAND USE DESCRIPTION	CAP	RD	LOC ZONE	FRONT	DEPTH	TOT LND UTS	UNIT TYPE	DT	DPTH FACT	% COND	TOT ADJ	UNIT PRICE	ADJ UNIT PRICE	LAND VALUE	OTHER ADJUSTMENTS AND NOTES	YEAR	DENSITY	DECL	FRZ	YR	CONSRV
1	000140	C	RES GOLF	100		RSF-1	0.00	0.00	1.00	LT		1.00	1.00	1.00	700,000.00	700,000.00	700,000							

REVIEW DATE 09/01/2020 BY RK Total Acres: 0.00 Total Land Value: 700,000 Market: 0 Agricultural: 0 Common: 700,000 PRINTED 07/30/2025 BY SYS