LOT 25
SEA MARSH VILLAGE 1 PB 4/11

MCG REVOCABLE TRUST/MARSHALL CRAIG T TRUSTEE
345 RAVINE DR S
SOUTH ORANGE, NJ 07079

2025

01-6N-29-1900-0025-0000

NASSAU COUNTY PROPERTY

BUILDING CHARACTERISTICS

ELEMENT	CD	CONSTRUCTION
Exterior Wall	17	CB STUCCO 100
Roof Structur	03	GABLE/HIP 100
Roof Cover	03	COMP SHNGL 100
Interior Wall	05	DRYWALL 100
Interior Floo	11	CLAY TILE 50
Interior Floo	14	CARPET 50
Air Condition	03	CENTRAL 100
Heating Type	04	AIR DUCTED 100
Bedrooms		4 100
Bathrooms		3 100
Frame	02	WOOD FRAME 100
Stories	1.	1. 100
Units		0 100
BUD8 Adjustme	05	DIST 1A 100
Occupancy	00	NONE 100
Quality	04	Quality Level 04

DOR CODE	0100	SINGLE FAMILY	
MAP NUM		MKT AREA	10
NEIGHBORHOOD/LOC	10001.00		

AREA TYPE	TOTAL GROSS AREA	PCT OF BASE	YEAR	TOT ADJ AREA	SUBAREA MARKET VALUE
BAS	3,041	100	1993	3,041	433,401
BAS	182	100	2009	182	25,938
FGR	483	55	1993	266	37,910
FOP	30	30	1993	9	1,282
TOTALS	3,736			3,498	498,533

MARKET ADJUSTMENTS

TYPE	MDL	EFF. AREA	TOT ADJ PTS	EFF. BASE RATE	REPL. COST NEW	AYB	EYB	ECON	FNCT		NORM	% COND
0500	01	3,498	108.6750	171.71	600,642	1980	1990	0	0	0	17.00	83.00

1 SFR CUST – 0% - 2025 Heated Area: 3223 HX Base Yr

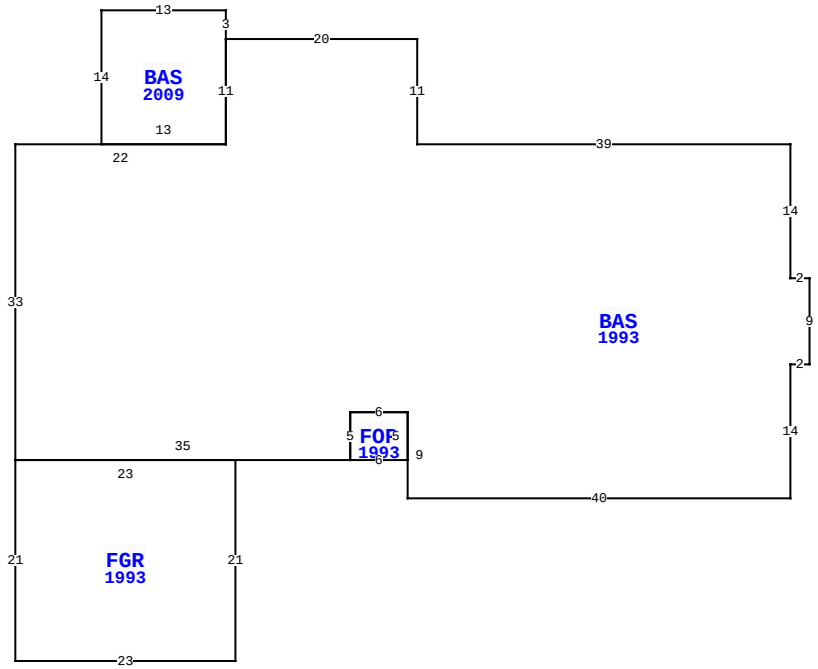

13 RED MAPLE RD, FERNANDINA BEACH

BLD DATE		LGL DATE	
XF DATE		LAND DATE	05/07/2025 MLU
INC DATE		AG DATE	

VALUATION SUMMARY

VALUATION BY	STANDARD
Tax Group: 5	Tax Dist:
BUILDING MARKET VALUE	498,533
TOTAL MARKET OB/XF VALUE	8,553
TOTAL LAND VALUE - MARKET	700,000
TOTAL MARKET VALUE	1,207,086
SOH/AGL Deduction	0
ASSESSED VALUE	1,207,086
TOTAL EXEMPTION VALUE	0
BASE TAXABLE VALUE	1,207,086
TOTAL JUST VALUE	1,207,086
NCON VALUE	0
INCOME VALUE	
PREVIOUS YEAR MKT VALUE	1,134,985

PERMIT NUM	DESCRIPTION	AMT	ISSUED

SALES DATA

OFF RECORD Number	DATE	TYPE INST	Q / U	V / I	RSN CD	SALE PRICE
2769/539	1/13/2025	WD	U	I	11	100
GRANTOR: MARSHALL CRAIG T & ME						
GRANTEE: MCG REVOCABLE TRUST						
2695/1785	2/22/2024	WD	Q	I	01	1,550,000
GRANTOR: WEST JOHN H III & MAR						
GRANTEE: MARSHALL CRAIG T &						

BUILDING NOTES

BUILDING DIMENSIONS

BAS=[YR=1993] W39 N11 W20 BAS=[YR=2009] N3 W13 S14 E13 N11 $ S11 W22 S33 FGR=[YR=1993] S21 E23 N21W23$ E35 FOP=[YR=1993] E6 N5 W6S5$ N5 E6 S9 E40 N14 E2 N9 W2 N14$.

EXTRA FEATURES

LN	OB/XF CODE	DESCRIPTION	BLD	CAP	L	W	UNITS	UT	Adj R	ADJ UNIT PRICE	ORIG COND	YEAR ON	YEAR ACTUAL	Q	% COND	OB/XF MKT VALUE	NOTES
1	0850	PEBBLE WLK	0	0	0	0	1,534.00	SF	3.50	3.50	100	1980	1980	3	30	1,611	
2	0504	FP-ELECTRI	0	0	0	0	1.00	UT	2,000.00	2,000.00	100	1980	1980	3	44	880	
3	0850	PEBBLE WLK	0	0	0	0	347.00	SF	3.50	3.50	100	1980	1980	3	30	364	
4	0810	CONCRETE A	0	0	14	9	126.00	SF	6.50	6.50	100	1980	1980	3	30	246	
5	0446	BOX FNC 6'	0	0	0	0	21.00	LF	20.00	20.00	100	1980	1980	3	20	84	
6	1126	CB/STC 8"	0	0	0	0	30.00	SF	8.00	8.00	100	1980	1980	3	30	72	
7	0850	PEBBLE WLK	0	0	26	4	104.00	SF	3.50	3.50	100	1980	1980	3	30	109	
8	0855	CONC PAVER	0	0	0	0	176.00	SF	10.00	10.00	100	2011	2011	3	91	1,602	
9	0855	CONC PAVER	0	0	0	0	394.00	SF	10.00	10.00	100	2011	2011	3	91	3,585	

LAND DESCRIPTION

TOTAL OB/XF 8,553

LN	USE CODE	CLS	LAND USE DESCRIPTION	CAP	RD	LOC ZONE	FRONT	DEPTH	TOT LND UTS	UNIT TYPE	DT	DPTH FACT	% COND	TOT ADJ	UNIT PRICE	ADJ UNIT PRICE	LAND VALUE	OTHER ADJUSTMENTS AND NOTES	YEAR	DENSITY	DECL	FRZ	YR	CONSRV
1	000140	C	RES GOLF	0		RSF-1	0.00	0.00	1.00	LT		1.00	1.00	1.00	700,000.00	700,000.00	700,000							

REVIEW DATE 04/23/2020 BY DJA Total Acres: 0.00 Total Land Value: 700,000 Market: 0 Agricultural: 0 Common: 700,000 PRINTED 07/30/2025 BY SYS