LOT 21
SEA MARSH VILLAGE 1 PB 4/11

CLAYMAN MARK H REVOCABLE TRUST/CLAYMAN MICHELLE J
3 WILLOW POND RD
FERNANDINA BEACH, FL 32034

2025

01-6N-29-1900-0021-0000

BUILDING CHARACTERISTICS

ELEMENT	CD	CONSTRUCTION
Exterior Wall	10	ABOVE AVG 100
Roof Structur	03	GABLE/HIP 100
Roof Cover	03	COMP SHNGL 100
Interior Wall	05	DRYWALL 100
Interior Floo	14	CARPET 90
Interior Floo	11	CLAY TILE 10
Air Condition	03	CENTRAL 100
Heating Type	04	AIR DUCTED 100
Bedrooms		2 100
Bathrooms		2 100
Frame	02	WOOD FRAME 100
Stories	1.	1. 100
Units		0 100
BUD8 Adjustme	05	DIST 1A 100
Occupancy	00	NONE 100
Quality	04	Quality Level 04
DOR CODE	0100	SINGLE FAMILY
MAP NUM		MKT AREA 10
NEIGHBORHOOD/LOC	10001.00	

AREA TYPE	TOTAL GROSS AREA	PCT OF BASE	YEAR	TOT ADJ AREA	SUBAREA MARKET VALUE
BAS	2,040	100	1993	2,040	291,163
FGR	600	55	1993	330	47,100
FOP	24	30	1994	7	999
FSP	132	40	2010	53	7,564
SFB	102	80	2010	82	11,703
UOP	81	20	1993	16	2,284
TOTALS	2,979			2,528	360,814

MARKET ADJUSTMENTS

TYPE	MDL	EFF. AREA	TOT ADJ PTS	EFF. BASE RATE	REPL. COST NEW	AYB	EYB	ECON	FNCT		NORM	% COND
0500	01	2,528	109.1664	172.48	436,029	1983	1983	0	0	0	17.25	82.75

1 SFR CUST – 100% - 2025 Heated Area: 2122 HX Base Yr 2025

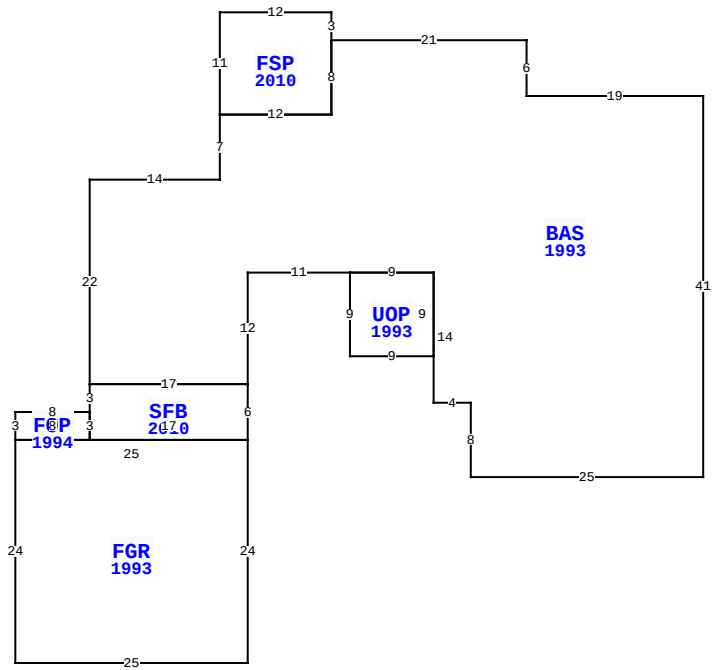

3 WILLOW POND RD, FERNANDINA BEACH

BLD DATE		LGL DATE	
XF DATE		LAND DATE	05/07/2025 MLU
INC DATE		AG DATE	

NASSAU COUNTY PROPERTY

PAGE 1 of 1 5

VALUATION SUMMARY

VALUATION BY		STANDARD
Tax Group: 5	Tax Dist:	
BUILDING MARKET VALUE		360,814
TOTAL MARKET OB/XF VALUE		48,657
TOTAL LAND VALUE - MARKET		700,000
TOTAL MARKET VALUE		1,109,471
SOH/AGL Deduction		0
ASSESSED VALUE		1,109,471
TOTAL EXEMPTION VALUE	HX HB	50,722
BASE TAXABLE VALUE		1,058,749
TOTAL JUST VALUE		1,109,471
NCON VALUE		45,585
INCOME VALUE		
PREVIOUS YEAR MKT VALUE		996,720

PERMIT NUM	DESCRIPTION	AMT	ISSUED
SP240006861	POOL	76,000	06/10/2024

SALES DATA

OFF RECORD Number	DATE	TYPE INST	Q / U	V / I	RSN CD	SALE PRICE
2717/1081	5/17/2024	QC	U	I	11	100
GRANTOR: CLAYMAN MARK HOWARD &						
GRANTEE: CLAYMAN MARK H REVO						
2702/1142	3/28/2024	WD	Q	I	01	1,401,000
GRANTOR: NADEAU FAMILY ENTERPR						
GRANTEE: CLAYMAN MARK HOWARD						

BUILDING NOTES

BUILDING DIMENSIONS

BAS=[YR=1993] W19 N6 W21 FSP=[YR=2010] N3 W12 S11 E12 N8$ S8 W12 S7 W14 S22 SFB=[YR=2010] S3 FOP=[YR=1994] W8S3 FGR=[YR=1993] S24 E25 N24 W25 $ E8 N3$ S3E17N6W17$ E17 N12E11 UOP=[YR=1993] S9 E9 N9 W9 $ E9 S14 E4 S8 E25 N41 $.

EXTRA FEATURES

LN	OB/XF CODE	DESCRIPTION	BLD	CAP	L	W	UNITS	UT	Adj R	ADJ UNIT PRICE	ORIG COND	YEAR ON	YEAR ACTUAL	Q	% COND	OB/XF MKT VALUE	NOTES
1	0803	ASPHALT C	0	100	0	0	1,200.00	SF	2.00	2.00	100	1983	1983	3	50	1,200	
2	0504	FP-ELECTRI	0	100	0	0	1.00	UT	2,000.00	2,000.00	100	1983	1983	3	51.5	1,030	
3	0858	SCULP CONC	0	100	0	0	80.00	SF	13.00	13.00	100	1986	1986	3	81	842	
4	0855	CONC PAVER	0	100	0	0	926.00	SF	10.00	10.00	100	2025	2024		100	9,260	
5	0861	POOL GUNIT	0	100	0	0	240.00	SF	85.00	85.00	100	2025	2024		100	20,400	
6	0911	SCRN RM A	0	100	0	0	910.00	SF	17.50	17.50	100	2025	2024		100	15,925	

LAND DESCRIPTION

TOTAL OB/XF 48,657

LN	USE CODE	CLS	LAND USE DESCRIPTION	CAP	RD	LOC ZONE	FRONT	DEPTH	TOT LND UTS	UNIT TYPE	DT	DPTH FACT	% COND	TOT ADJ	UNIT PRICE	ADJ UNIT PRICE	LAND VALUE	OTHER ADJUSTMENTS AND NOTES	YEAR	DENSITY	DECL	FRZ	YR	CONSRV
1	000140	C	RES GOLF	100		RSF-1	0.00	0.00	1.00	LT		1.00	1.00	1.00	700,000.00	700,000.00	700,000							

REVIEW DATE 02/28/2025 BY HS Total Acres: 0.00 Total Land Value: 700,000 Market: 0 Agricultural: 0 Common: 700,000 PRINTED 07/30/2025 BY SYS