LOT 125
MARSH CREEK VLG 2 PB 4/21 & 22

BROWN EDWARD H & DEBRA Y
2301 BROOKELAKE DR
DUNWOODY, GA 30338

2025

01-6N-29-1320-0125-0000

NASSAU COUNTY PROPERTY

BUILDING CHARACTERISTICS

ELEMENT	CD	CONSTRUCTION
Exterior Wall	12	CEDAR 100
Roof Structur	08	IRREGULAR 100
Roof Cover	03	COMP SHNGL 100
Interior Wall	05	DRYWALL 100
Interior Floo	14	CARPET 70
Interior Floo	12	HARDWOOD 30
Air Condition	03	CENTRAL 100
Heating Type	04	AIR DUCTED 100
Bedrooms		3 100
Bathrooms		3 100
Frame	02	WOOD FRAME 100
Stories	2.	2. 100
Units		0 100
BUD8 Adjustme	05	DIST 1A 100
Quality	01	Quality Level 01

DOR CODE 0100 SINGLE FAMILY
MAP NUM | MKT AREA 10
NEIGHBORHOOD/LOC 10001.00

AREA TYPE	TOTAL GROSS AREA	PCT OF BASE	YEAR	TOT ADJ AREA	SUBAREA MARKET VALUE
BAS	1,443	100	1993	1,443	189,022
FGR	228	55	2010	125	16,374
FLR	24	0	1993	0	0
FLR	48	0	1993	0	0
FOP	52	30	1993	16	2,096
FUS	550	100	1993	550	72,046
UOP	182	20	1993	36	4,716
UOP	761	20	1993	152	19,910
TOTALS	3,288			2,322	304,163

MARKET ADJUSTMENTS

TYPE	MDL	EFF. AREA	TOT ADJ PTS	EFF. BASE RATE	REPL. COST NEW	AYB	EYB	ECON	FNCT		NORM	% COND
0500	01	2,322	103.6350	163.74	380,204	1984	1984	0	0	0	20.00	80.00

1 SFR CUST – 0% - 2023 Heated Area: 1993 HX Base Yr

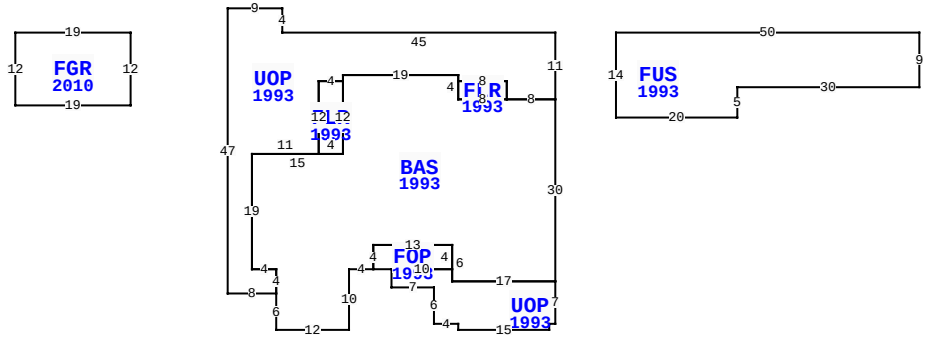

55 MARSH CREEK RD, FERNANDINA BEACH

BLD DATE		LGL DATE	
XF DATE		LAND DATE	05/07/2025 MLU
INC DATE		AG DATE	

VALUATION SUMMARY

VALUATION BY	STANDARD
Tax Group: 5	Tax Dist:
BUILDING MARKET VALUE	304,163
TOTAL MARKET OB/XF VALUE	5,338
TOTAL LAND VALUE - MARKET	560,000
TOTAL MARKET VALUE	869,501
SOH/AGL Deduction	0
ASSESSED VALUE	869,501
TOTAL EXEMPTION VALUE	0
BASE TAXABLE VALUE	869,501
TOTAL JUST VALUE	869,501
NCON VALUE	0
INCOME VALUE	
PREVIOUS YEAR MKT VALUE	816,091

PERMIT NUM	DESCRIPTION	AMT	ISSUED

SALES DATA

OFF RECORD Number	DATE	TYPE INST	Q / U	V / I	RSN CD	SALE PRICE
2774/791	3/13/2025	WD	Q	I	01	970,000
GRANTOR: BRUIN TEN LLC						
GRANTEE: BROWN EDWARD H & DE						
2552/1633	4/05/2022	WD	Q	I	01	800,000
GRANTOR: COLEN ADAM E & ERIN E						
GRANTEE: BRUIN TEN LLC						

BUILDING NOTES

BUILDING DIMENSIONS

BAS=[YR=1993;ORIG=-46,43] S6 E12 N10 E4 N4 E13 S6 E17 N30 W8 W8 N4 W19 S1 S12 W15 S19 E4 S4 $
UOP=[YR=1993;ORIG=0,0] W45 N4 W9 S47 E8 N4 W4 N19 E11 N12 E4 N1 E19 S1 E8 S3 E8 N11 $
FUS=[YR=1993;ORIG=10,0] E50 S9 W30 S5 W20 N14 $
FGR=[YR=2010;ORIG=-70,0] W19 S12 E19 N12 $
UOP=[YR=1993;ORIG=-27,39] S3 E7 S6 E4 S1 E15 N1 E1 N7 W17 N2 W10 $
FOP=[YR=1993;ORIG=-30,39] E3 E10 N4 W13 S4 $
FLR=[YR=1993;ORIG=-35,8] S12 W4 N12 E4 $
FLR=[YR=1993;ORIG=-8,11] N3 W8 S3 E8 $
PTR=[ORIG=0,0] E10 W10 $

EXTRA FEATURES

LN	OB/XF CODE	DESCRIPTION	BLD	CAP	L	W	UNITS	UT	Adj R	ADJ UNIT PRICE	ORIG COND	YEAR ON	YEAR ACTUAL	Q	% COND	OB/XF MKT VALUE	NOTES
1	0504	FP-ELECTRI	0	0	0	0	1.00	UT	2,000.00	2,000.00	100	1984	1984	3	54	1,080	
2	0810	CONCRETE A	0	0	0	0	200.00	SF	6.50	6.50	100	1984	1984	3	41	533	
3	0811	CONCRETE B	0	0	0	0	621.00	SF	5.20	5.20	100	1995	1995	3	68	2,196	
4	1125	CB/STC 6"	0	0	0	0	42.00	SF	7.35	7.35	100	1995	1995	3	68	210	
5	0443	STK FNC 6'	0	0	0	0	12.00	LF	10.00	10.00	100	1995	1995	3	20	24	
6	0463	FENCE GATE	0	0	0	0	2.00	UT	300.00	300.00	100	1995	1995	3	32	192	
7	0820	WOOD WALK	0	0	26	5	130.00	SF	11.75	11.75	100	1995	1995	3	40	611	
8	0820	WOOD WALK	0	0	19	4	76.00	SF	11.75	11.75	100	1995	1995	3	40	357	
9	0850	PEBBLE WLK	0	0	0	0	110.00	SF	3.50	3.50	100	1982	1982	3	35	135	

TOTAL OB/XF 5,338

LAND DESCRIPTION

LN	USE CODE	CLS	LAND USE DESCRIPTION	CAP	RD	LOC ZONE	FRONT	DEPTH	TOT LND UTS	UNIT TYPE	DT	DPTH FACT	% COND	TOT ADJ	UNIT PRICE	ADJ UNIT PRICE	LAND VALUE	OTHER ADJUSTMENTS AND NOTES	YEAR	DENSITY	DECL	FRZ	YR	CONSRV
1	000140	C	RES GOLF	0		RSF-1	0.00	0.00	1.00	LT		1.00	1.00	0.80	700,000.00	560,000.00	560,000							

REVIEW DATE 04/27/2020 BY DJA Total Acres: 0.00 Total Land Value: 560,000 Market: 0 Agricultural: 0 Common: 560,000 PRINTED 07/30/2025 BY SYS