LOT 175
MARSH CREEK VLG 1-A PB 4/22-A

LANE DEBRA/LANE DORIS E
1 ROYAL TERN
FERNANDINA BEACH, FL 32034

2025

01-6N-29-131A-0175-0000

NASSAU COUNTY PROPERTY

BUILDING CHARACTERISTICS

ELEMENT	CD	CONSTRUCTION
Exterior Wall	10	ABOVE AVG 100
Roof Structur	03	GABLE/HIP 100
Roof Cover	03	COMP SHNGL 100
Interior Wall	05	DRYWALL 100
Interior Floo	12	HARDWOOD 70
Interior Floo	14	CARPET 30
Air Condition	03	CENTRAL 100
Heating Type	04	AIR DUCTED 100
Bedrooms		3 100
Bathrooms		2.5 100
Frame	02	WOOD FRAME 100
Stories	1.5	1.5 100
Units		0 100
Occupancy	00	NONE 100
Quality	04	Quality Level 04
DOR CODE	0100	SINGLE FAMILY
MAP NUM		MKT AREA 10
NEIGHBORHOOD/LOC	10001.00	

AREA TYPE	TOTAL GROSS AREA	PCT OF BASE	YEAR	TOT ADJ AREA	SUBAREA MARKET VALUE
BAS	1,794	100	2020	1,794	313,800
FGR	447	55	2020	246	43,030
FOP	65	30	2020	20	3,499
FOP	78	30	2020	23	4,023
FUS	648	100	2020	648	113,346
STR	60	10	2020	6	1,049
UOP	320	20	2020	64	11,195
TOTALS	3,412			2,801	489,941

MARKET ADJUSTMENTS

TYPE	MDL	EFF. AREA	TOT ADJ PTS	EFF. BASE RATE	REPL. COST NEW	AYB	EYB	ECON	FNCT		NORM	% COND
0500	01	2,801	112.3920	177.58	497,402	2020	2020	0	0	0	1.50	98.50

1 SFR CUST – 100% - 2022 Heated Area: 2442 HX Base Yr 2022

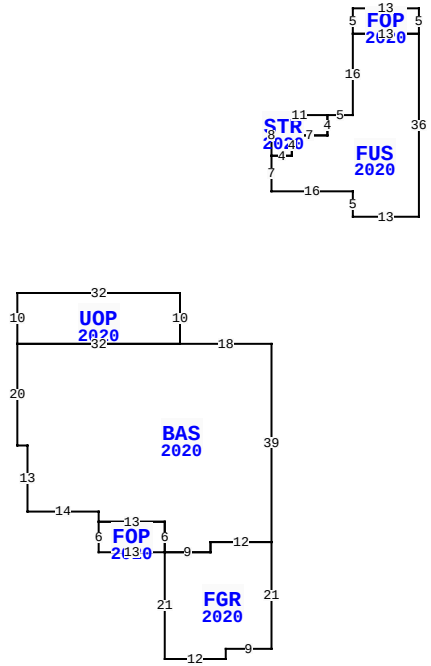

1 ROYAL TERN, FERNANDINA BEACH

BLD DATE		LGL DATE	
XF DATE		LAND DATE	05/07/2025 MLU
INC DATE		AG DATE	

VALUATION SUMMARY

VALUATION BY		STANDARD
Tax Group: 5	Tax Dist:	
BUILDING MARKET VALUE		489,941
TOTAL MARKET OB/XF VALUE		14,210
TOTAL LAND VALUE - MARKET		700,000
TOTAL MARKET VALUE		1,204,151
SOH/AGL Deduction		338,047
ASSESSED VALUE		866,104
TOTAL EXEMPTION VALUE	HX HB	50,722
BASE TAXABLE VALUE		815,382
TOTAL JUST VALUE		1,204,151
NCON VALUE		0
INCOME VALUE		
PREVIOUS YEAR MKT VALUE		981,834

PERMIT NUM	DESCRIPTION	AMT	ISSUED
B1910481	NEW CONSTR	327,569	10/03/2019

SALES DATA

OFF RECORD Number	DATE	TYPE INST	Q U	V I	RSN CD	SALE PRICE
2545/1897	9/23/2021	QC	U	I	11	35,000
GRANTOR: LANE DEBRA						
GRANTEE: LANE DEBRA & DORIS						
2261/1000	3/12/2019	WD	Q	V	01	235,000
GRANTOR: EVERSOLE GARY L & JOH						
GRANTEE: LANE DEBRA						

BUILDING NOTES

EXTRA FEATURES

LN	OB/XF CODE	DESCRIPTION	BLD	CAP	L	W	UNITS	UT	Adj R	ADJ UNIT PRICE	ORIG COND	YEAR ON	YEAR ACTUAL	Q	% COND	OB/XF MKT VALUE	NOTES
1	0504	FP-ELECTRI	0	100	0	0	1.00	UT	2,000.00	2,000.00	100	2020	2020	3	99	1,980	
2	0855	CONC PAVER	0	100	0	0	1,248.00	SF	10.00	10.00	100	2020	2020	3	98	12,230	

BUILDING DIMENSIONS

BAS=[YR=2020] W18 UOP=[YR=2020] N10 W32 S10 E32 $ W32 S20 E2 S13 E14 S2 FOP=[YR=2020] S6 E13 FGR=[YR=2020] S21 E12 N2 E9 N21 W12 S2 W9 $ N6 W13 $ E13 S6 E9 N2 E12 N39 $ PTR= N30 FUS=[YR=2020] N7 STR=[YR=2020] N8 E11 S4 W7 S4 W4 $ E4 N4 E7 N4 E5 N16 FOP=[YR=2020] N5 E13 S5 W13 $ E13 S36 W13 N5 W16 $ S30 $.

LAND DESCRIPTION

TOTAL OB/XF 14,210

LN	USE CODE	CLS	LAND USE DESCRIPTION	CAP	RD	LOC ZONE	FRONT	DEPTH	TOT LND UTS	UNIT TYPE	DT	DPTH FACT	% COND	TOT ADJ	UNIT PRICE	ADJ UNIT PRICE	LAND VALUE	OTHER ADJUSTMENTS AND NOTES	YEAR	DENSITY	DECL	FRZ	YR	CONSRV
1	000140	C	RES GOLF	100		RSF-1	0.00	0.00	1.00	LT		1.00	1.00	1.00	700,000.00	700,000.00	700,000							

REVIEW DATE 12/16/2020 BY RK Total Acres: 0.00 Total Land Value: 700,000 Market: 0 Agricultural: 0 Common: 700,000 PRINTED 07/30/2025 BY SYS