LOT 81 & N 4 FT OF LOT 82
IN OR 446/539 & OR 624/807
MARSH CREEK VILLAGE 1 PB 4/18

MOZENA LOUISE R FAMILY TRUST/MOZENA LOUISE R TRUST
1 MARSH CREEK ROAD
FERNANDINA BEACH, FL 32034

2025

01-6N-29-1300-0081-0000

NASSAU COUNTY PROPERTY

BUILDING CHARACTERISTICS

ELEMENT	CD	CONSTRUCTION
Exterior Wall	16	WD FR STUC 100
Roof Structur	03	GABLE/HIP 100
Roof Cover	03	COMP SHNGL 100
Interior Wall	05	DRYWALL 100
Interior Floo	14	CARPET 60
Interior Floo	12	HARDWOOD 40
Air Condition	03	CENTRAL 100
Heating Type	04	AIR DUCTED 100
Bedrooms		3 100
Bathrooms		2.5 100
Frame	02	WOOD FRAME 100
Stories	2.	2. 100
Units		0 100
BUD8 Adjustme	05	DIST 1A 100
Occupancy	00	NONE 100
Quality	03	Quality Level 03
DOR CODE	0100	SINGLE FAMILY
MAP NUM		MKT AREA 10
NEIGHBORHOOD/LOC	10001.00	

AREA TYPE	TOTAL GROSS AREA	PCT OF BASE	YEAR	TOT ADJ AREA	SUBAREA MARKET VALUE
BAS	117	100	1993	117	15,714
BAS	1,366	100	1993	1,366	183,473
BAS	204	100	2012	204	27,400
FGR	506	55	1993	278	37,339
FOP	72	30	1993	22	2,955
FUS	580	100	1993	580	77,902
UOP	392	20	1993	78	10,476
TOTALS	3,237			2,645	355,261

MARKET ADJUSTMENTS

TYPE	MDL	EFF. AREA	TOT ADJ PTS	EFF. BASE RATE	REPL. COST NEW	AYB	EYB	ECON	FNCT		NORM	% COND
0500	01	2,645	105.6000	166.85	441,318	1985	1985	0	0	0	19.50	80.50

1 SFR CUST – 100% - 0 Heated Area: 2267 HX Base Yr 1986

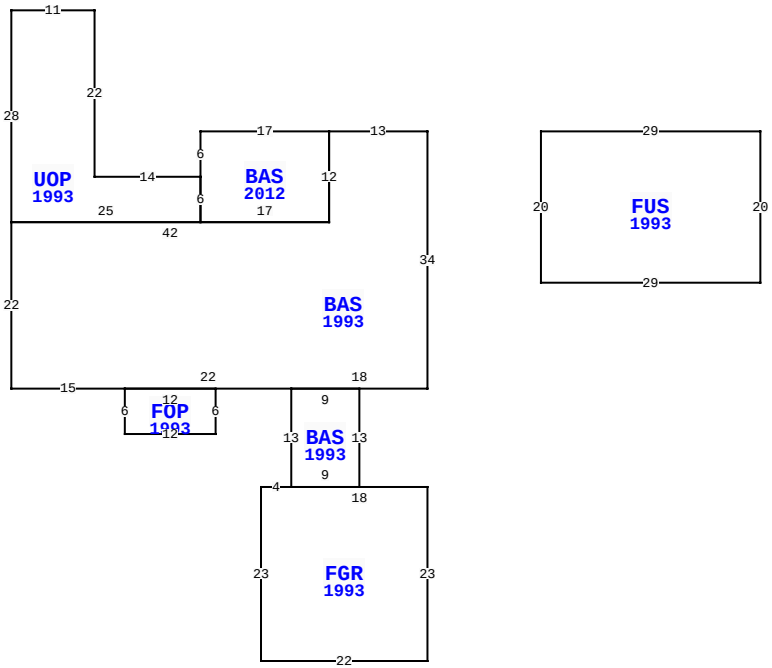

1 MARSH CREEK RD, FERNANDINA BEACH

BLD DATE		LGL DATE	
XF DATE		LAND DATE	
INC DATE		AG DATE	

VALUATION SUMMARY

VALUATION BY		STANDARD
Tax Group: 5	Tax Dist:	
BUILDING MARKET VALUE		355,261
TOTAL MARKET OB/XF VALUE		4,033
TOTAL LAND VALUE - MARKET		480,000
TOTAL MARKET VALUE		839,294
SOH/AGL Deduction		448,206
ASSESSED VALUE		391,088
TOTAL EXEMPTION VALUE	HX HB WX	55,722
BASE TAXABLE VALUE		335,366
TOTAL JUST VALUE		839,294
NCON VALUE		0
INCOME VALUE		
PREVIOUS YEAR MKT VALUE		812,737

PERMIT NUM	DESCRIPTION	AMT	ISSUED

SALES DATA

OFF RECORD Number	DATE	TYPE INST	Q / U	V / I	RSN CD	SALE PRICE
0624/0807	4/22/1991	WD	U	V		100
GRANTOR: POOLE EDWARD & SALLY						
GRANTEE: MOZENA DON C						
0437/0228	10/01/1984	WD	Q	V		66,000
GRANTOR:						
GRANTEE:						

BUILDING NOTES

EXTRA FEATURES

LN	OB/XF CODE	DESCRIPTION	BLD	CAP	L	W	UNITS	UT	Adj R	ADJ UNIT PRICE	ORIG COND	YEAR ON	YEAR ACTUAL	Q	% COND	OB/XF MKT VALUE	NOTES
1	0504	FP-ELECTRI	0	100	0	0	1.00	UT	2,000.00	2,000.00	100	1985	1985	3	56	1,120	
2	0812	CONCRETE C	0	100	0	0	1,655.00	SF	4.00	4.00	100	1985	1985	3	44	2,913	

BUILDING DIMENSIONS

```
BAS=[YR=1993;ORIG=0,0] W13 S12 W42 S22 E15 E22 E18 N34 $
FUS=[YR=1993;ORIG=15,0] E29 S20 W29 N20 $
FGR=[YR=1993;ORIG=-18,47] W4 S23 E22 N23 W18 $
UOP=[YR=1993;ORIG=-30,6] W14 N22 W11 S28 E25 N6 $
BAS=[YR=2012;ORIG=-13,0] W17 S6 S6 E17 N12 $
BAS=[YR=1993;ORIG=-18,34] S13 E9 N13 W9 $
FOP=[YR=1993;ORIG=-40,34] S6 E12 N6 W12 $
PTR=[ORIG=0,0] E15 W15 $
.
```

LAND DESCRIPTION

TOTAL OB/XF 4,033

LN	USE CODE	CLS	LAND USE DESCRIPTION	CAP	RD	LOC ZONE	FRONT	DEPTH	TOT LND UTS	UNIT TYPE	DT	DPTH FACT	% COND	TOT ADJ	UNIT PRICE	ADJ UNIT PRICE	LAND VALUE	OTHER ADJUSTMENTS AND NOTES	YEAR	DENSITY	DECL	FRZ	YR	CONSRV
1	000100	C	RES	100		RSF-1	0.00	0.00	1.00	LT		1.00	1.00	0.80	600,000.00	480,000.00	480,000							

REVIEW DATE 02/28/2025 BY HS Total Acres: 0.00 Total Land Value: 480,000 Market: 0 Agricultural: 0 Common: 480,000 PRINTED 07/30/2025 BY SYS