LOT 58
SEA MARSH VILLAGE #2 PBK 4/16
IN OR 2326/855

KAHN CYNTHIA M
8 LIVE OAK
FERNANDINA BEACH, FL 32034

2025

01-6N-29-0300-0058-0000

NASSAU COUNTY PROPERTY

BUILDING CHARACTERISTICS

ELEMENT	CD	CONSTRUCTION
Exterior Wall	16	WD FR STUC 100
Roof Structur	03	GABLE/HIP 100
Roof Cover	03	COMP SHNGL 100
Interior Wall	05	DRYWALL 100
Interior Floo	12	HARDWOOD 50
Interior Floo	14	CARPET 50
Air Condition	03	CENTRAL 100
Heating Type	04	AIR DUCTED 100
Bedrooms		3 100
Bathrooms		2.5 100
Frame	02	WOOD FRAME 100
Stories	1.	1. 100
Units		0 100
BUD8 Adjustme	05	DIST 1A 100
Occupancy	00	NONE 100
Quality	04	Quality Level 04

DOR CODE	0100	SINGLE FAMILY	
MAP NUM		MKT AREA	10
NEIGHBORHOOD/LOC	10001.00		

AREA TYPE	TOTAL GROSS AREA	PCT OF BASE	YEAR	TOT ADJ AREA	SUBAREA MARKET VALUE
BAS	2,613	100	1993	2,613	358,103
FGR	522	55	1993	287	39,332
FOP	35	30	1993	10	1,370
FOP	85	30	1993	26	3,563
FST	21	55	1993	12	1,645
FST	121	55	1993	67	9,182
PTO	240	5	2017	12	1,645
SFB	216	80	1993	173	23,709
UOP	339	20	1993	68	9,319
TOTALS	4,192			3,268	447,868

MARKET ADJUSTMENTS

TYPE	MDL	EFF. AREA	TOT ADJ PTS	EFF. BASE RATE	REPL. COST NEW	AYB	EYB	ECON	FNCT		NORM	% COND
0500	01	3,268	105.7770	167.13	546,181	1988	1988	0	0	0	18.00	82.00

1 SFR CUST – 100% - 2020 Heated Area: 2786 HX Base Yr 2020

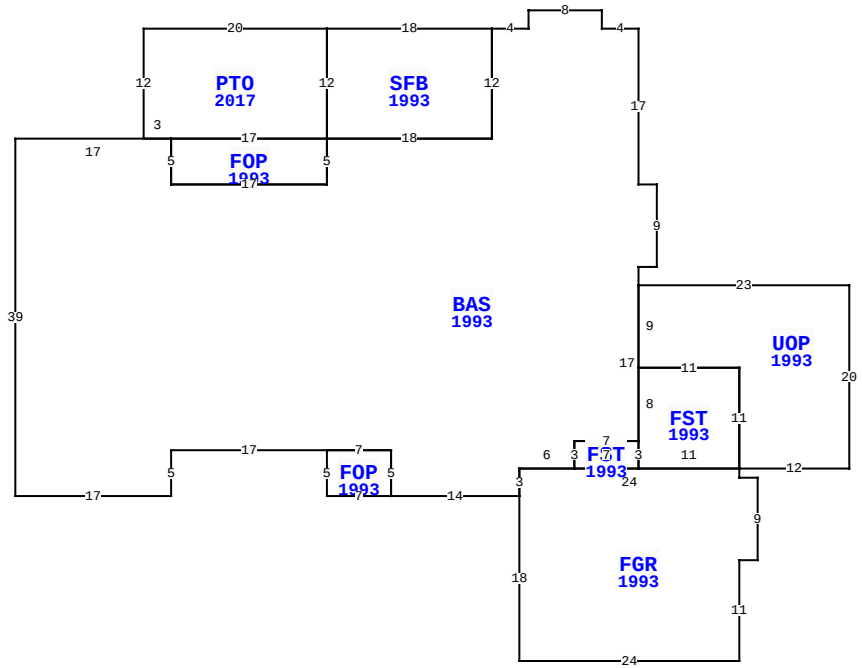

8 LIVE OAK, FERNANDINA BEACH

BLD DATE		LGL DATE	
XF DATE		LAND DATE	03/14/2024 MLU
INC DATE		AG DATE	

VALUATION SUMMARY

VALUATION BY		STANDARD
Tax Group: 5	Tax Dist:	
BUILDING MARKET VALUE		447,868
TOTAL MARKET OB/XF VALUE		14,806
TOTAL LAND VALUE - MARKET		550,000
TOTAL MARKET VALUE		1,012,674
SOH/AGL Deduction		393,254
ASSESSED VALUE		619,420
TOTAL EXEMPTION VALUE	HX HB	50,722
BASE TAXABLE VALUE		568,698
TOTAL JUST VALUE		1,012,674
NCON VALUE		0
INCOME VALUE		
PREVIOUS YEAR MKT VALUE		993,289

PERMIT NUM	DESCRIPTION	AMT	ISSUED
E21418	NEW CONSTR	2,500	11/01/2008

SALES DATA

OFF RECORD Number	DATE	TYPE INST	Q / U	V / I	RSN CD	SALE PRICE
2326/0855	12/17/2019	WD	Q	I	01	695,000
GRANTOR: GINGRICH WILLIAM G ET						
GRANTEE: KAHN CYNTHIA M						
1603/0909	12/04/2008	WD	U	I	19	100
GRANTOR: GINGRICH WILLIAM G &						
GRANTEE: GINCRICH WILLIAM G						

BUILDING NOTES

BUILDING DIMENSIONS

UOP=[YR=1993] W23 BAS=[YR=1993] N2 E2 N9 W2 N17 W4 N2 W8 S2 W4 SFB=[YR=1993] W18 PTO=[YR=2017] W20 S12 E3 FOP=[YR=1993] S5 E17 N5 W17$ E17 N12$ S12 E18 N12$ S12 W18 S5 W17 N5 W17 S39 E17 N5 E17 FOP=[YR=1993] S5 E7 N5 W7$ E7 S5 E14 FGR=[YR=1993] S18 E24 N11 E2 N9 W2 N1 FST=[YR=1993] N11 W11 S8 FST=[YR=1993] W7 S3 E7 N3$ S3 E11$ W24 S3$ N3 E6 N3 E7 N17$ S9 E11 S11 E12 N20$.

EXTRA FEATURES

LN	OB/XF CODE	DESCRIPTION	BLD	CAP	L	W	UNITS	UT	Adj R	ADJ UNIT PRICE	ORIG COND	YEAR ON	YEAR ACTUAL	Q	% COND	OB/XF MKT VALUE	NOTES
1	0810	CONCRETE A	0	100	23	3	69.00	SF	6.50	6.50	100	1988	1988	3	52	233	
2	0504	FP-ELECTRI	0	100	0	0	1.00	UT	2,000.00	2,000.00	100	1988	1988	3	62	1,240	
3	0855	CONC PAVER	0	100	0	0	2,179.00	SF	10.00	10.00	100	1988	1988	3	52	11,331	
4	0855	CONC PAVER	0	100	0	0	385.00	SF	10.00	10.00	100	1988	1988	3	52	2,002	

LAND DESCRIPTION

TOTAL OB/XF 14,806

LN	USE CODE	CLS	LAND USE DESCRIPTION	CAP	RD	LOC ZONE	FRONT	DEPTH	TOT LND UTS	UNIT TYPE	DT	DPTH FACT	% COND	TOT ADJ	UNIT PRICE	ADJ UNIT PRICE	LAND VALUE	OTHER ADJUSTMENTS AND NOTES	YEAR	DENSITY	DECL	FRZ	YR	CONSRV
1	000100	C	RES	100		RSF-1	0.00	0.00	1.00	LT		1.00	1.00	1.10	500,000.00	550,000.00	550,000							

REVIEW DATE 01/21/2020 BY DJ Total Acres: 0.00 Total Land Value: 550,000 Market: 0 Agricultural: 0 Common: 550,000 PRINTED 07/30/2025 BY SYS