TRACT 46
CEDAR POINT
SEA MARSH VLG UNIT 2 PB 4/16

RICCARDI LOUIS A & KATIANNE G
PO BOX 336
AMERICUS, GA 31709

2025

01-6N-29-0300-0046-0000

NASSAU COUNTY PROPERTY

BUILDING CHARACTERISTICS

ELEMENT	CD	CONSTRUCTION
Exterior Wall	16	WD FR STUC 100
Roof Structur	08	IRREGULAR 100
Roof Cover	03	COMP SHNGL 100
Interior Wall	05	DRYWALL 100
Interior Floo	11	CLAY TILE 50
Interior Floo	12	HARDWOOD 50
Air Condition	03	CENTRAL 100
Heating Type	04	AIR DUCTED 100
Bedrooms		5 100
Bathrooms		4 100
Frame	02	WOOD FRAME 100
Stories	1.5	1.5 100
Units		0 100
Occupancy	00	NONE 100
Quality	04	Quality Level 04
DOR CODE	0100	SINGLE FAMILY
MAP NUM		MKT AREA 10
NEIGHBORHOOD/LOC	10001.00	

AREA TYPE	TOTAL GROSS AREA	PCT OF BASE	YEAR	TOT ADJ AREA	SUBAREA MARKET VALUE
BAS	2,705	100	1999	2,705	424,131
BAS	383	100	2009	383	60,053
FGR	740	55	1999	407	63,815
FOP	18	30	1999	5	784
FUS	302	100	1999	302	47,352
STP	12	10	2001	1	157
UOP	15	20	1999	3	471
UOP	133	20	1999	27	4,233
UOP	14	20	2001	3	471
USP	660	30	2001	198	31,046
TOTALS	4,982			4,034	632,511

MARKET ADJUSTMENTS

TYPE	MDL	EFF. AREA	TOT ADJ PTS	EFF. BASE RATE	REPL. COST NEW	AYB	EYB	ECON	FNCT		NORM	% COND
0500	01	4,034	110.8800	175.19	706,716	1999	2003	0	0	0	10.50	89.50

1 SFR CUST – 0% - 0 Heated Area: 3390 HX Base Yr

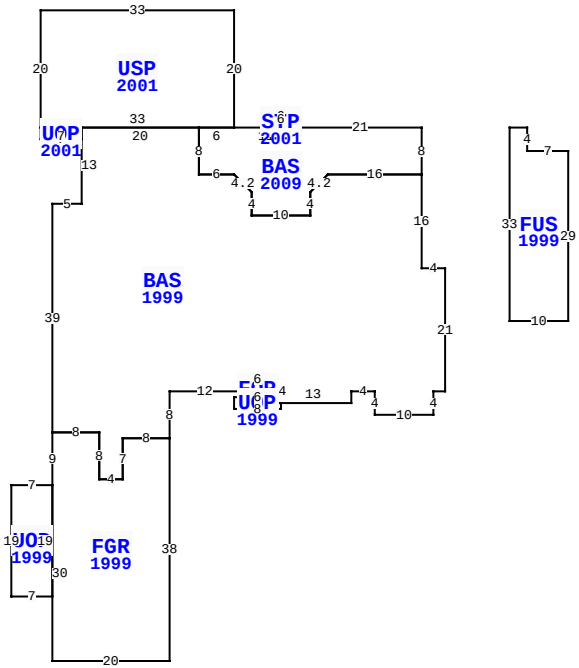

118 SEA MARSH RD, FERNANDINA BEACH

BLD DATE		LGL DATE	
XF DATE		LAND DATE	03/14/2024 MLU
INC DATE		AG DATE	

VALUATION SUMMARY

VALUATION BY	STANDARD
Tax Group: 5	Tax Dist:
BUILDING MARKET VALUE	632,511
TOTAL MARKET OB/XF VALUE	19,549
TOTAL LAND VALUE - MARKET	500,000
TOTAL MARKET VALUE	1,152,060
SOH/AGL Deduction	0
ASSESSED VALUE	1,152,060
TOTAL EXEMPTION VALUE	0
BASE TAXABLE VALUE	1,152,060
TOTAL JUST VALUE	1,152,060
NCON VALUE	0
INCOME VALUE	
PREVIOUS YEAR MKT VALUE	1,124,122

PERMIT NUM	DESCRIPTION	AMT	ISSUED
B018594	XFOB	7,000	07/01/2001
B9805227	NEW CONSTR	149,715	07/06/1998

SALES DATA

OFF RECORD Number	DATE	TYPE INST	Q / U	V / I	RSN CD	SALE PRICE
2499/0951	9/23/2021	WD	Q	I	02	1,100,000
GRANTOR: COTTLE STANLEY H & DE						
GRANTEE: RICCARDI LOUIS A &						
1127/0182	4/03/2003	WD	U	I	23	515,000
GRANTOR: HERRON JAMES E & DAPH						
GRANTEE: COTTLE STANLEY & DE						

BUILDING NOTES

BUILDING DIMENSIONS

BAS=[YR=2009] W21 STP=[YR=2001] N2 W6 S2 E6 $ W11USP=[YR=2001] N20 W33 S20 UOP=[YR=2001] S2 E7 N2 W7 $ E33 $ W6 BAS=[YR=1999] W20 S13 W5 S39 FGR=[YR=1999] S9 UOP=[YR=1999] W7 S19 E7 N19 $ S30 E20 N38 W8 S7W4 N8 W8 $ E8 S8 E4 N7 E8 N8 E12 FOP=[YR=1999] S1 UOP=[YR=1999] W1 S2E8 N1 W1 N1 W6 $ E6 N3 W6 S2 $N2 E6 S4 E13 N2 E4 S4 E10 N4 E2 N21 W4 N16 W16 D3 L3 S4 W10 N4 U3 L3 W6 N8 $ S8 E6 D3 R3 S4 E10 N4 U3 R3 E16 N8$ PTR= E15FUS=[YR=1999] E3 S4 E7 S29 W10 N33 $ W15 $.

EXTRA FEATURES

LN	OB/XF CODE	DESCRIPTION	BLD	CAP	L	W	UNITS	UT	Adj R	ADJ UNIT PRICE	ORIG COND	YEAR ON	YEAR ACTUAL	Q	% COND	OB/XF MKT VALUE	NOTES
1	0504	FP-ELECTRI	0	0	0	0	1.00	UT	2,000.00	2,000.00	100	1999	1999	3	81	1,620	
2	0810	CONCRETE A	0	0	0	0	2,140.00	SF	6.50	6.50	100	1999	1999	3	75	10,433	
3	0810	CONCRETE A	0	0	0	0	72.00	SF	6.50	6.50	100	1999	1999	3	75	351	
4	0861	POOL GUNIT	0	0	20	11	220.00	SF	85.00	85.00	100	2001	2001	3	25	4,675	
5	1126	CB/STC 8"	0	0	0	0	82.00	SF	8.00	8.00	100	2001	2001	3	79	518	
6	0855	CONC PAVER	0	0	0	0	340.00	SF	7.00	7.00	100	2003	2003	3	82	1,952	

LAND DESCRIPTION

TOTAL OB/XF 19,549

LN	USE CODE	CLS	LAND USE DESCRIPTION	CAP	RD	LOC ZONE	FRONT	DEPTH	TOT LND UTS	UNIT TYPE	DT	DPTH FACT	% COND	TOT ADJ	UNIT PRICE	ADJ UNIT PRICE	LAND VALUE	OTHER ADJUSTMENTS AND NOTES	YEAR	DENSITY	DECL	FRZ	YR	CONSRV
1	000100	C	RES	0		RSF-1	0.00	0.00	1.00	LT		1.00	1.00	1.00	500,000.00	500,000.00	500,000							

REVIEW DATE 05/12/2019 BY KBA Total Acres: 0.00 Total Land Value: 500,000 Market: 0 Agricultural: 0 Common: 500,000 PRINTED 07/30/2025 BY SYS