TRACT 37
IN OR 2584/1283
CEDAR POINT

BURNSON JANET M TRUST/BURNSON JANET M TRUSTEE
119 BITTER NUT ROAD
FERNANDINA BEACH, FL 32034-5000

2025

01-6N-29-0300-0037-0000

NASSAU COUNTY PROPERTY

BUILDING CHARACTERISTICS

ELEMENT	CD	CONSTRUCTION
Exterior Wall	10	ABOVE AVG 100
Roof Structur	03	GABLE/HIP 100
Roof Cover	03	COMP SHNGL 100
Interior Wall	05	DRYWALL 100
Interior Floo	12	HARDWOOD 80
Interior Floo	11	CLAY TILE 20
Air Condition	03	CENTRAL 100
Heating Type	04	AIR DUCTED 100
Bedrooms		3 100
Bathrooms		3 100
Frame	02	WOOD FRAME 100
Stories	1.	1. 100
Units		0 100
Occupancy	00	NONE 100
Quality	04	Quality Level 04
DOR CODE	0100	SINGLE FAMILY
MAP NUM		MKT AREA 10
NEIGHBORHOOD/LOC	10001.00	

AREA TYPE	TOTAL GROSS AREA	PCT OF BASE	YEAR	TOT ADJ AREA	SUBAREA MARKET VALUE
BAS	2,660	100	1993	2,660	410,664
FGR	901	55	1993	496	76,575
FOP	48	30	1993	14	2,161
FOP	106	30	1993	32	4,940
FOP	203	30	1993	61	9,418
FOP	280	30	1993	84	12,968
TOTALS	4,198			3,347	516,727

MARKET ADJUSTMENTS

TYPE	MDL	EFF. AREA	TOT ADJ PTS	EFF. BASE RATE	REPL. COST NEW	AYB	EYB	ECON	FNCT		NORM	% COND
0500	01	3,347	111.6696	176.44	590,545	1993	1998	0	0	0	12.50	87.50

1 SFR CUST – 100% - 1994 Heated Area: 2660 HX Base Yr 1994

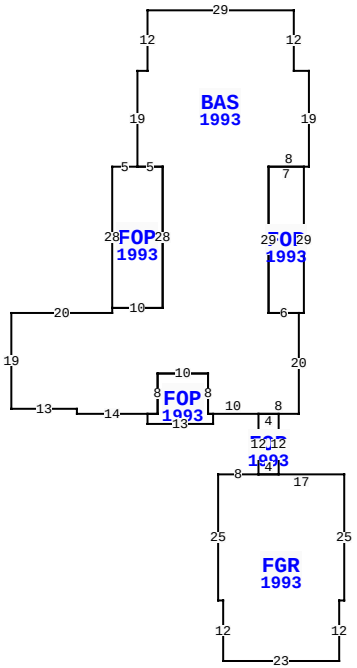

119 BITTER NUT RD, FERNANDINA BEACH

BLD DATE		LGL DATE	
XF DATE		LAND DATE	03/14/2024 MLU
INC DATE		AG DATE	

VALUATION SUMMARY

VALUATION BY		STANDARD
Tax Group: 5	Tax Dist:	
BUILDING MARKET VALUE		516,727
TOTAL MARKET OB/XF VALUE		25,769
TOTAL LAND VALUE - MARKET		500,000
TOTAL MARKET VALUE		1,042,496
SOH/AGL Deduction		582,154
ASSESSED VALUE		460,342
TOTAL EXEMPTION VALUE	HX HB WX	55,722
BASE TAXABLE VALUE		404,620
TOTAL JUST VALUE		1,042,496
NCON VALUE		0
INCOME VALUE		
PREVIOUS YEAR MKT VALUE		1,020,451

PERMIT NUM	DESCRIPTION	AMT	ISSUED
P1216156	WTRHTR	0	10/01/2012
B9906371	XFOB	6,000	08/01/1999
B9906083	SWIM POOL	28,000	05/01/1999
B9308798	NEW CONSTR	228,000	04/01/1993

SALES DATA

OFF RECORD Number	DATE	TYPE INST	Q / U	V / I	RSN CD	SALE PRICE
2584/1283	8/11/2022	WD	U	I	11	100
GRANTOR: BURNSON JANET M						
GRANTEE: BURNSON JANET M TRU						
0645/0711	12/31/1991	WD	Q	V		43,800
GRANTOR: WOODWARD BRIGITTE G						
GRANTEE: BURNSON MICHAEL & J						

BUILDING NOTES

BUILDING DIMENSIONS

BAS=[YR=1993] W3 N12 W29 S12 W2 S19 FOP=[YR=1993] W5 S28 E10 N28 W5 $ E5 S28 W10 S1 W20 S19 E13 S1 E14 FOP=[YR=1993] S2 E13 N2 W1 N8 W10 S8 W2 $ E2 N8 E10 S8 E10 FOP=[YR=1993] S12 FGR=[YR=1993] W8 S25 E1 S12 E23 N12 E1 N25 W17 $ E4 N12 W4 $ E8 N20 FOP=[YR=1993] E1 N29 W7 S29 E6 $ W6 N29 E8 N19 $.

EXTRA FEATURES

LN	OB/XF CODE	DESCRIPTION	BLD	CAP	L	W	UNITS	UT	Adj R	ADJ UNIT PRICE	ORIG COND	YEAR ON	YEAR ACTUAL	Q	% COND	OB/XF MKT VALUE	NOTES
1	0812	CONCRETE C	0	100	0	0	1,641.00	SF	4.00	4.00	100	1993	1993	3	64	4,201	
2	0810	CONCRETE A	0	100	0	0	156.00	SF	6.50	6.50	100	1993	1993	3	64	649	
3	0810	CONCRETE A	0	100	0	0	84.00	SF	6.50	6.50	100	1993	1993	3	64	349	
4	0504	FP-ELECTRI	0	100	0	0	1.00	UT	2,000.00	2,000.00	100	1993	1993	3	72	1,440	
5	0445	BOX FNC 5'	0	100	0	0	15.00	LF	8.10	8.10	100	1993	1993	3	20	24	
6	1126	CB/STC 8"	0	100	17	6	102.00	SF	8.00	8.00	100	1993	1993	3	64	522	
7	0861	POOL GUNIT	0	100	0	0	591.00	SF	85.00	85.00	100	1999	1999	3	21	10,549	
8	0910	SCRN RM L	0	100	0	0	1,209.00	SF	15.00	15.00	100	1999	1999	3	20	3,627	
9	0845	KOOL DECK	0	100	0	0	728.00	SF	7.25	7.25	100	1999	1999	3	75	3,959	
10	0877	JACUZZI	0	100	0	0	1.00	UT	1,000.00	1,000.00	100	1999	1999	3	20	200	

TOTAL OB/XF 25,520

LAND DESCRIPTION

LN	USE CODE	CLS	LAND USE DESCRIPTION	CAP	RD	LOC ZONE	FRONT	DEPTH	TOT LND UTS	UNIT TYPE	DT	DPTH FACT	% COND	TOT ADJ	UNIT PRICE	ADJ UNIT PRICE	LAND VALUE	OTHER ADJUSTMENTS AND NOTES	YEAR	DENSITY	DECL	FRZ	YR	CONSRV
1	000100	C	RES	100		RSF-1	0.00	0.00	1.00	LT		1.00	1.00	1.00	500,000.00	500,000.00	500,000							

REVIEW DATE 05/12/2019 BY KBA Total Acres: 0.00 Total Land Value: 500,000 Market: 0 Agricultural: 0 Common: 500,000 PRINTED 07/30/2025 BY SYS

TRACT 37
IN OR 2584/1283
CEDAR POINT

BURNSON JANET M TRUST/BURNSON JANET M TRUSTEE
119 BITTER NUT ROAD
FERNANDINA BEACH, FL 32034-5000

2025

01-6N-29-0300-0037-0000

NASSAU COUNTY PROPERTY

BUILDING CHARACTERISTICS

ELEMENT	CD	CONSTRUCTION

DOR CODE	0100	SINGLE FAMILY	
MAP NUM		MKT AREA	10
NEIGHBORHOOD/LOC	10001.00		

AREA TYPE	TOTAL GROSS AREA	PCT OF BASE	YEAR	TOT ADJ AREA	SUBAREA MARKET VALUE
TOTALS					

MARKET ADJUSTMENTS

TYPE	MDL	EFF. AREA	TOT ADJ PTS	EFF. BASE RATE	REPL. COST NEW	AYB	EYB	ECON	FNCT		NORM	% COND

VALUATION SUMMARY

VALUATION BY		STANDARD
Tax Group: 5	Tax Dist:	
BUILDING MARKET VALUE		516,727
TOTAL MARKET OB/XF VALUE		25,769
TOTAL LAND VALUE - MARKET		500,000
TOTAL MARKET VALUE		1,042,496
SOH/AGL Deduction		582,154
ASSESSED VALUE		460,342
TOTAL EXEMPTION VALUE	HX HB WX	55,722
BASE TAXABLE VALUE		404,620
TOTAL JUST VALUE		1,042,496
NCON VALUE		0
INCOME VALUE		
PREVIOUS YEAR MKT VALUE		1,020,451

PERMIT NUM	DESCRIPTION	AMT	ISSUED

BLD DATE		LGL DATE	
XF DATE		LAND DATE	03/14/2024 MLU
INC DATE		AG DATE	

SALES DATA

OFF RECORD Number	DATE	TYPE INST	Q / U	V / I	RSN CD	SALE PRICE
2584/1283	8/11/2022	WD	U	I	11	100
GRANTOR: BURNSON JANET M						
GRANTEE: BURNSON JANET M TRU						
0645/0711	12/31/1991	WD	Q	V		43,800
GRANTOR: WOODWARD BRIGITTE G						
GRANTEE: BURNSON MICHAEL & J						

BUILDING NOTES

BUILDING DIMENSIONS

EXTRA FEATURES

LN	OB/XF CODE	DESCRIPTION	BLD	CAP	L	W	UNITS	UT	Adj R	ADJ UNIT PRICE	ORIG COND	YEAR ON	YEAR ACTUAL	Q	% COND	OB/XF MKT VALUE	NOTES
11	0810	CONCRETE A	0	100	9	3	27.00	SF	6.50	6.50	100	1999	1999	3	75	132	
12	0810	CONCRETE A	0	100	0	0	24.00	SF	6.50	6.50	100	1999	1999	3	75	117	

LAND DESCRIPTION

TOTAL OB/XF 249

LN	USE CODE	CLS	LAND USE DESCRIPTION	CAP	RD	LOC ZONE	FRONT	DEPTH	TOT LND UTS	UNIT TYPE	DT	DPTH FACT	% COND	TOT ADJ	UNIT PRICE	ADJ UNIT PRICE	LAND VALUE	OTHER ADJUSTMENTS AND NOTES	YEAR	DENSITY	DECL	FRZ	YR	CONSRV

REVIEW DATE 05/12/2019 BY KBA Total Acres: 0.00 Total Land Value: 500,000 Market: 0 Agricultural: 0 Common: 500,000 PRINTED 07/30/2025 BY SYS