LOT 14
SEA MARSH VLG UNIT 2 PBK 4/16

BEARBROOK GROUP LLC
19 GREYSTONE ROAD
MARBLEHEAD, MA 01945

2025

01-6N-29-0300-0014-0000

BUILDING CHARACTERISTICS

ELEMENT	CD	CONSTRUCTION
Exterior Wall	16	WD FR STUC 100
Roof Structur	03	GABLE/HIP 100
Roof Cover	03	COMP SHNGL 100
Interior Wall	05	DRYWALL 100
Interior Floo	14	CARPET 50
Interior Floo	15	HARDTILE 50
Air Condition	03	CENTRAL 100
Heating Type	04	AIR DUCTED 100
Bedrooms		3 100
Bathrooms		3 100
Frame	02	WOOD FRAME 100
Stories	1.	1. 100
Units		0 100
BUD8 Adjustme	05	DIST 1A 100
Occupancy	00	NONE 100
Quality	04	Quality Level 04
DOR CODE	0100	SINGLE FAMILY
MAP NUM		MKT AREA 10
NEIGHBORHOOD/LOC	10001.00	

AREA TYPE	TOTAL GROSS AREA	PCT OF BASE	YEAR	TOT ADJ AREA	SUBAREA MARKET VALUE
BAS	2,441	100	1993	2,441	352,866
FGR	576	55	1993	317	45,825
STP	32	10	1993	3	434
UOP	159	20	1993	32	4,626
UOP	171	20	1993	34	4,915
USP	1,709	30	2019	513	74,158
UST	28	45	1993	13	1,879
TOTALS	5,116			3,353	484,702

MARKET ADJUSTMENTS

TYPE	MDL	EFF. AREA	TOT ADJ PTS	EFF. BASE RATE	REPL. COST NEW	AYB	EYB	ECON	FNCT		NORM	% COND
0500	01	3,353	111.5730	176.29	591,100	1984	1988	0	0	0	18.00	82.00

1 SFR CUST – 0% - 2024 Heated Area: 2441 HX Base Yr

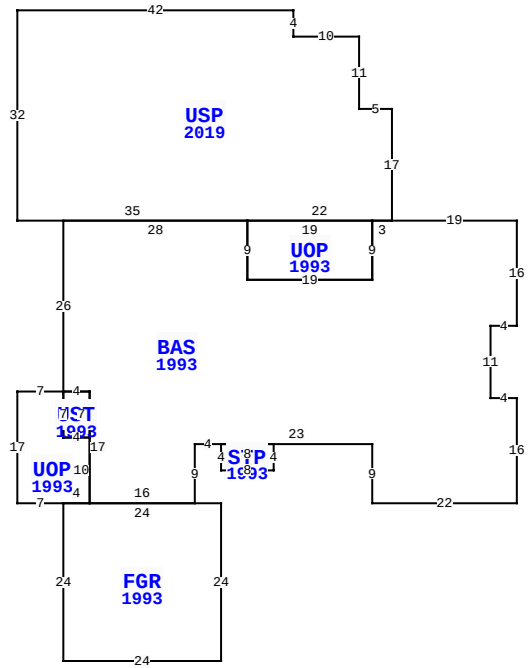

4 HICKORY LN, FERNANDINA BEACH

BLD DATE		LGL DATE	
XF DATE		LAND DATE	03/14/2024 MLU
INC DATE		AG DATE	

NASSAU COUNTY PROPERTY

PAGE 1 of 1 5

VALUATION SUMMARY

VALUATION BY	STANDARD
Tax Group: 5	Tax Dist:
BUILDING MARKET VALUE	484,702
TOTAL MARKET OB/XF VALUE	74,925
TOTAL LAND VALUE - MARKET	500,000
TOTAL MARKET VALUE	1,059,627
SOH/AGL Deduction	0
ASSESSED VALUE	1,059,627
TOTAL EXEMPTION VALUE	0
BASE TAXABLE VALUE	1,059,627
TOTAL JUST VALUE	1,059,627
NCON VALUE	0
INCOME VALUE	
PREVIOUS YEAR MKT VALUE	1,040,523

PERMIT NUM	DESCRIPTION	AMT	ISSUED
B1812285	SCRNRM	39,674	12/18/2018
B1806954	SWIM POOL	60,000	07/09/2018
B1531347	REPAIR/RRF	90,000	10/01/2015
M1217817	H/AC	0	12/01/2012

SALES DATA

OFF RECORD Number	DATE	TYPE INST	Q U	V I	RSN CD	SALE PRICE
2678/1033	11/09/2023	WD	Q	I	01	1,265,000
GRANTOR: JOHNSON ADAM R & MICH						
GRANTEE: BEARBROOK GROUP LLC						
1998/1519	8/05/2015	WD	Q	I	01	450,000
GRANTOR: PARDUE DANIEL G JR &						
GRANTEE: JOHNSON ADAM R & MI						

BUILDING NOTES

BUILDING DIMENSIONS

BAS=[YR=1993] W19 USP=[YR=2019] N17W5N11 W10N4W42S32E35
UOP=[YR=1993] E19 S9 W19 N9$ E22$ W3 S9 W19 N9 W28 S26
UOP=[YR=1993] W7 S17 E7 FGR=[YR=1993] S24 E24 N24 W24$ E4
N10 UST=[YR=1993] N7 W4 S7 E4$ W4 N7$E4 S17 E16 N9 E4
STP=[YR=1993] S4 E8 N4 W8$ E23 S9 E22 N16 W4 N11 E4 N16$.

EXTRA FEATURES

LN	OB/XF CODE	DESCRIPTION	BLD	CAP	L	W	UNITS	UT	Adj R	ADJ UNIT PRICE	ORIG COND	YEAR ON	YEAR ACTUAL	Q	% COND	OB/XF MKT VALUE	NOTES
1	0811	CONCRETE B	0	0	0	0	950.00	SF	5.20	5.20	100	1984	1984	3	41	2,025	
2	0504	FP-ELECTRI	0	0	0	0	1.00	UT	2,000.00	2,000.00	100	1984	1984	3	54	1,080	
3	0811	CONCRETE B	0	0	0	0	875.00	SF	5.20	5.20	100	1990	1990	3	57	2,594	
4	0861	POOL GUNIT	0	0	0	0	648.00	SF	85.00	85.00	100	2019	2019	3	87	47,920	
5	0871	POOL HTR R	0	0	0	0	1.00	UT	2,000.00	2,000.00	100	2019	2019	3	82	1,640	
6	0500	FP-PRE FAB	0	0	0	0	1.00	UT	3,500.00	3,500.00	100	2019	2019	3	98	3,430	
7	0600	SUMMER KIT	0	0	0	0	1.00	UT	10,000.00	10,000.00	100	2019	2019	3	82	8,200	
8	0855	CONC PAVER	0	0	0	0	441.00	SF	10.00	10.00	100	2019	2019	3	97	4,278	
9	0462	ST/AL FNC	0	0	0	0	432.00	SF	10.00	10.00	100	2019	2019	3	87	3,758	

LAND DESCRIPTION

TOTAL OB/XF 74,925

LN	USE CODE	CLS	LAND USE DESCRIPTION	CAP	RD	LOC ZONE	FRONT	DEPTH	TOT LND UTS	UNIT TYPE	DT	DPTH FACT	% COND	TOT ADJ	UNIT PRICE	ADJ UNIT PRICE	LAND VALUE	OTHER ADJUSTMENTS AND NOTES	YEAR	DENSITY	DECL	FRZ	YR	CONSRV
1	000100	C	RES	0		RSF-1	0.00	0.00	1.00	LT		1.00	1.00	1.00	500,000.00	500,000.00	500,000							

REVIEW DATE 07/30/2019 BY DJ Total Acres: 0.00 Total Land Value: 500,000 Market: 0 Agricultural: 0 Common: 500,000 PRINTED 07/30/2025 BY SYS