LOT 91
BEACHWOOD VILLAGE UNIT 1
PB 4/25-27

BEAUCHAMP DAVID C & LYNNE O
49 LAUREL OAK ROAD
FERNANDINA BEACH, FL 32034

2025

01-6N-29-0201-0091-0000

BUILDING CHARACTERISTICS

ELEMENT	CD	CONSTRUCTION
Exterior Wall	10	ABOVE AVG 100
Roof Structur	03	GABLE/HIP 100
Roof Cover	03	COMP SHNGL 100
Interior Wall	05	DRYWALL 100
Interior Floo	13	LVT/LAMNT 50
Interior Floo	14	CARPET 50
Air Condition	03	CENTRAL 100
Heating Type	04	AIR DUCTED 100
Bedrooms		3 100
Bathrooms		3 100
Frame	02	WOOD FRAME 100
Stories	2.	2. 100
Units		0 100
BUD8 Adjustme	05	DIST 1A 100
Occupancy	00	NONE 100
Quality	06	Quality Level 06
DOR CODE	0100	SINGLE FAMILY
MAP NUM		MKT AREA 10
NEIGHBORHOOD/LOC	10001.00	

AREA TYPE	TOTAL GROSS AREA	PCT OF BASE	YEAR	TOT ADJ AREA	SUBAREA MARKET VALUE
BAS	1,584	100	1993	1,584	284,182
BAS	6	100	2024	6	1,076
BAS	6	100	2024	6	1,076
BAS	48	100	2024	48	8,611
BAS	65	100	2024	65	11,661
BAS	456	100	2024	456	81,810
DCC	326	15	2024	49	8,791
FCP	391	25	2024	98	17,582
FOP	75	30	1993	22	3,947
FOP	40	30	2024	12	2,153
TOTALS	3,695			2,840	509,518

MARKET ADJUSTMENTS

TYPE	MDL	EFF. AREA	TOT ADJ PTS	EFF. BASE RATE	REPL. COST NEW	AYB	EYB	ECON	FNCT		NORM	% COND
0500	01	2,840	121.4400	191.88	544,939	1975	2010	0	0	0	6.50	93.50

1 SFR CUST – 100% - 2021 Heated Area: 2587 HX Base Yr 2021

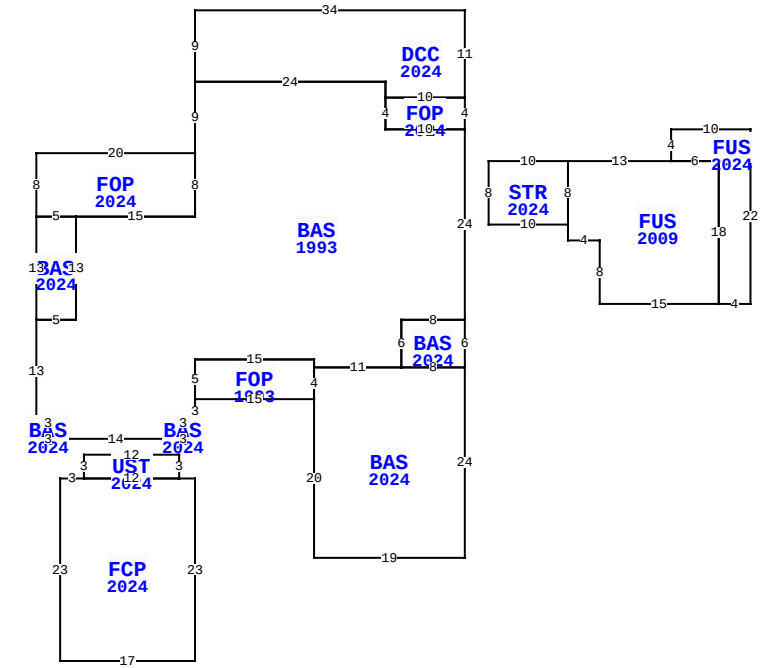

** This building has 15 Sub-Areas

49 LAUREL OAK, FERNANDINA BEACH

BLD DATE		LGL DATE	
XF DATE		LAND DATE	05/07/2024 MLU
INC DATE		AG DATE	

NASSAU COUNTY PROPERTY

PAGE 1 of 1 5

VALUATION SUMMARY

VALUATION BY		STANDARD
Tax Group: 5	Tax Dist:	
BUILDING MARKET VALUE		509,518
TOTAL MARKET OB/XF VALUE		0
TOTAL LAND VALUE - MARKET		540,000
TOTAL MARKET VALUE		1,049,518
SOH/AGL Deduction		363,507
ASSESSED VALUE		686,011
TOTAL EXEMPTION VALUE	HX HB	50,722
BASE TAXABLE VALUE		635,289
TOTAL JUST VALUE		1,049,518
NCON VALUE		0
INCOME VALUE		
PREVIOUS YEAR MKT VALUE		1,026,294

PERMIT NUM	DESCRIPTION	AMT	ISSUED
2113322	ADDITION	0	01/01/2022

SALES DATA

OFF RECORD Number	DATE	TYPE INST	Q / U	V / I	RSN CD	SALE PRICE
2286/0907	6/20/2019	WD	Q	I	01	585,000
GRANTOR: ROCKE CHRISTOPHER J &						
GRANTEE: BEAUCHAMP DAVID C &						
0762/0188	6/05/1996	QC	U	I	07	100
GRANTOR: REILINGH ALBERT						
GRANTEE: REILINGH JOHANNA C						

BUILDING NOTES

BUILDING DIMENSIONS

BAS=[YR=1993;ORIG=-34,10] S9 S8 W15 S13 W5 S13 E3 S2 E14 N2 E3 N3 N5 E15 S1 E11 N6 E8 N24 W10 N4 N2 W24 $
BAS=[YR=2024;ORIG=-19,46] E11 E8 S24 W19 N20 N4 $
DCC=[YR=2024;ORIG=-34,10] E24 S2 E10 N11 W34 S9 $
FUS=[YR=2009;ORIG=13,20] E13 E6 S18 W15 N8 W4 N2 N8 $
FOP=[YR=2024;ORIG=-34,27] W15 W5 N8 E20 S8 $
FUS=[YR=2024;ORIG=32,38] E4 N22 W10 S4 E6 S18 $
STR=[YR=2024;ORIG=3,20] E10 S8 W10 N8 $
FOP=[YR=1993;ORIG=-34,50] E15 N4 N1 W15 S5 $
BAS=[YR=2024;ORIG=-49,40] W5 N13 E5 S13 $
BAS=[YR=2024;ORIG=-8,40] E8 S6 W8 N6 $
FOP=[YR=2024;ORIG=-10,12] E10 S4 W10 N4 $

EXTRA FEATURES

L N	OB/XF CODE	DESCRIPTION	BLD	CAP	L	W	UNITS	UT	Adj R	ADJ UNIT PRICE	ORIG COND	YEAR ON	YEAR ACTUAL	Q	% COND	OB/XF MKT VALUE	NOTES

LAND DESCRIPTION

TOTAL OB/XF 0

L N	USE CODE	CLS	LAND USE DESCRIPTION	CAP	R D	LOC ZONE	FRONT	DEPTH	TOT LND UTS	UNIT TYPE	D T	DPTH FACT	% COND	TOT ADJ	UNIT PRICE	ADJ UNIT PRICE	LAND VALUE	OTHER ADJUSTMENTS AND NOTES	YEAR	DENSITY	DECL	FRZ	YR	CONSRV
1	000100	C	RES	100		RSF-1	0.00	0.00	1.00	LT		1.00	1.00	1.20	450,000.00	540,000.00	540,000							

REVIEW DATE 06/16/2022 BY DJ Total Acres: 0.00 Total Land Value: 540,000 Market: 0 Agricultural: 0 Common: 540,000 PRINTED 07/30/2025 BY SYS