LOT 70
IN OR 1365/806
BEACHWOOD VILLAGE UNIT 1

PARKER THADDEUS C & MARGARET E
1900 SOUTH OAKMONT STREET
TAMPA, FL 33629

2025

01-6N-29-0201-0070-0000

BUILDING CHARACTERISTICS

ELEMENT	CD	CONSTRUCTION
Exterior Wall	12	CEDAR 60
Exterior Wall	16	WD FR STUC 40
Roof Structur	08	IRREGULAR 100
Roof Cover	03	COMP SHNGL 100
Interior Wall	05	DRYWALL 100
Interior Floo	12	HARDWOOD 50
Interior Floo	14	CARPET 50
Air Condition	03	CENTRAL 100
Heating Type	04	AIR DUCTED 100
Bedrooms		4 100
Bathrooms		4 100
Frame	02	WOOD FRAME 100
Stories	2.	2. 100
Units		0 100
BUD8 Adjustme	05	DIST 1A 100
Occupancy	00	NONE 100
Quality	03	Quality Level 03
DOR CODE	0100	SINGLE FAMILY
MAP NUM		MKT AREA 10
NEIGHBORHOOD/LOC	10001.00	

AREA TYPE	TOTAL GROSS AREA	PCT OF BASE	YEAR	TOT ADJ AREA	SUBAREA MARKET VALUE
BAL	44	15	2016	7	1,054
BAS	1,490	100	1993	1,490	224,531
FGR	352	55	1993	194	29,234
FOP	30	30	1993	9	1,356
FUS	654	100	1993	654	98,552
FUS	435	100	2016	435	65,551
STR	15	10	2016	2	301
STR	36	10	2016	4	603
STR	55	10	2016	6	904
UOP	156	20	1993	31	4,672
TOTALS	3,780			2,935	442,280

MARKET ADJUSTMENTS

TYPE	MDL	EFF. AREA	TOT ADJ PTS	EFF. BASE RATE	REPL. COST NEW	AYB	EYB	ECON	FNCT		NORM	% COND
0500	01	2,935	110.2620	174.21	511,306	1987	1997	0	0	0	13.50	86.50

1 SFR CUST – 0% - 0 Heated Area: 2579 HX Base Yr

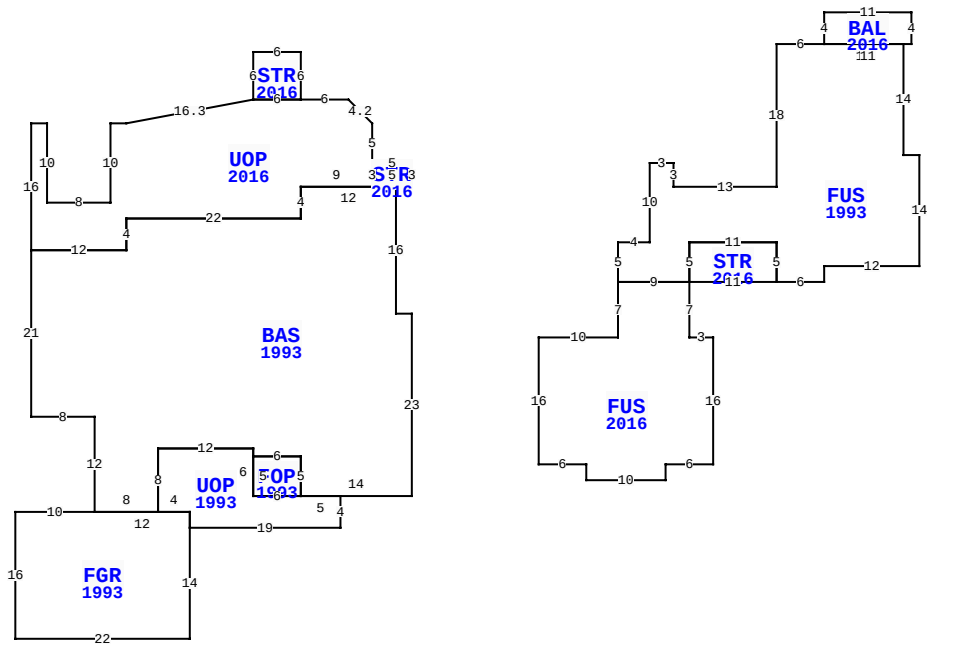

** This building has 11 Sub-Areas

23 LAUREL OAK, FERNANDINA BEACH

BLD DATE		LGL DATE	
XF DATE		LAND DATE	05/07/2024 MLU
INC DATE		AG DATE	

NASSAU COUNTY PROPERTY

PAGE 1 of 1 5

VALUATION SUMMARY

VALUATION BY	STANDARD
Tax Group: 5	Tax Dist:
BUILDING MARKET VALUE	442,280
TOTAL MARKET OB/XF VALUE	24,395
TOTAL LAND VALUE - MARKET	562,500
TOTAL MARKET VALUE	1,029,175
SOH/AGL Deduction	166,818
ASSESSED VALUE	862,357
TOTAL EXEMPTION VALUE	0
BASE TAXABLE VALUE	862,357
TOTAL JUST VALUE	1,029,175
NCON VALUE	0
INCOME VALUE	
PREVIOUS YEAR MKT VALUE	1,010,202

PERMIT NUM	DESCRIPTION	AMT	ISSUED
B1530906	ADDITION	275,000	07/01/2015
B1529902	SWIM POOL	20,000	02/01/2015
B1429596	REMODEL	45,000	11/01/2014
BP3819	N/A	88,550	01/09/1987

SALES DATA

OFF RECORD Number	DATE	TYPE INST	Q / U	V / I	RSN CD	SALE PRICE
1365/0806	11/07/2005	WD	Q	I		650,000
GRANTOR: FELKER RICHARD R						
GRANTEE: PARKER THADDEUS & M						
0672/0718	12/21/1992	WD	Q	I		258,500
GRANTOR: COKER JACK & BETTY						
GRANTEE: FELKER RICHARD R						

BUILDING NOTES

EXTRA FEATURES

LN	OB/XF CODE	DESCRIPTION	BLD	CAP	L	W	UNITS	UT	Adj R	ADJ UNIT PRICE	ORIG COND	YEAR ON	YEAR ACTUAL	Q	% COND	OB/XF MKT VALUE	NOTES
1	0504	FP-ELECTRI	0	0	0	0	1.00	UT	2,000.00	2,000.00	100	1987	1987	3	60	1,200	
2	0444	BOX FNC 4'	0	0	0	0	17.00	LF	26.00	26.00	100	2016	2016	3	70	309	
3	0446	BOX FNC 6'	0	0	0	0	16.00	LF	80.00	80.00	100	2016	2016	3	70	896	
4	0300	BOAT DCK W	0	0	11	12	132.00	SF	40.00	40.00	100	2016	2016	3	78	4,118	
5	1242	WD DECK A	0	0	0	0	80.00	SF	10.00	10.00	100	2016	2016	3	70	560	
6	0861	POOL GUNIT	0	0	8	10	80.00	SF	255.00	255.00	100	2016	2016	3	78	15,912	
7	0871	POOL HTR R	0	0	0	0	1.00	UT	2,000.00	2,000.00	100	2016	2016	3	70	1,400	

BUILDING DIMENSIONS

STR=[YR=2016] W5 UOP=[YR=2016] N5 U3 L3 W6 STR=[YR=2016] N6 W6 S6 E6$ W6 D3 L16 W2 S10 W8 N10 W2 S16 BAS=[YR=1993] S21 E8 S12 FGR=[YR=1993] W10 S16 E22 N14 UOP=[YR=1993] E19 N4 W5 FOP=[YR=1993] N5 W6 S5 E6$ W6 N6 W12 S8 E4 S2$ N2 W12$ E8 N8 E12 S1 E6 S5E14 N23 W2 N16 W12 S4 W22 S4 W12$ E12 N4 E22N4 E9 N3$ S3 E5 N3$ PTR= E30 FUS=[YR=1993] E3 S3 E13 N18 E6 BAL=[YR=2016] N4 E11 S4 W11$ E10S14 E2 S14 W12 S2 W6 STR=[YR=2016] W11 N5 E11 S5$ N5 W11 S5 FUS=[YR=2016] S7 E3 S16 W6 S2 W10 N2 W6 N16 E10 N7 E9$ W9 N5 E4 N10 $ W30$.

LAND DESCRIPTION

TOTAL OB/XF 24,395

LN	USE CODE	CLS	LAND USE DESCRIPTION	CAP	RD	LOC ZONE	FRONT	DEPTH	TOT LND UTS	UNIT TYPE	DT	DPTH FACT	% COND	TOT ADJ	UNIT PRICE	ADJ UNIT PRICE	LAND VALUE	OTHER ADJUSTMENTS AND NOTES	YEAR	DENSITY	DECL	FRZ	YR	CONSRV
1	000100	C	RES	0		RSF-1	0.00	0.00	1.00	LT		1.00	1.00	1.25	450,000.00	562,500.00	562,500							

REVIEW DATE 05/12/2019 BY KBA Total Acres: 0.00 Total Land Value: 562,500 Market: 0 Agricultural: 0 Common: 562,500 PRINTED 07/30/2025 BY SYS