LOTS 68 & 67
BEACHWOOD VLGE # 1 PB 4/25-27

ANDERSON AMY C
19 LAUREL OAK
FERNANDINA BEACH, FL 32034

2025

01-6N-29-0201-0068-0000

NASSAU COUNTY PROPERTY

BUILDING CHARACTERISTICS

ELEMENT	CD	CONSTRUCTION
Exterior Wall	12	CEDAR 50
Exterior Wall	16	WD FR STUC 50
Roof Structur	03	GABLE/HIP 100
Roof Cover	03	COMP SHNGL 100
Interior Wall	05	DRYWALL 100
Interior Floo	12	HARDWOOD 80
Interior Floo	11	CLAY TILE 20
Air Condition	03	CENTRAL 100
Heating Type	04	AIR DUCTED 100
Bedrooms		3 100
Bathrooms		3 100
Frame	02	WOOD FRAME 100
Stories	2.	2. 100
Units		0 100
BUD8 Adjustme	05	DIST 1A 100
Occupancy	00	NONE 100
Quality	04	Quality Level 04
DOR CODE	0100	SINGLE FAMILY
MAP NUM		MKT AREA 10
NEIGHBORHOOD/LOC	10001.00	

AREA TYPE	TOTAL GROSS AREA	PCT OF BASE	YEAR	TOT ADJ AREA	SUBAREA MARKET VALUE
BAS	3,512	100	1993	3,512	468,023
FGR	526	55	1993	289	38,514
FOP	21	30	1993	6	799
FOP	33	30	1993	10	1,333
FSP	256	40	1993	102	13,593
FUS	336	100	1993	336	44,777
UOP	36	20	1993	7	933
UOP	76	20	1993	15	1,999
UOP	252	20	1993	50	6,663
UOP	309	20	1993	62	8,262
TOTALS	5,357			4,389	584,896

MARKET ADJUSTMENTS

TYPE	MDL	EFF. AREA	TOT ADJ PTS	EFF. BASE RATE	REPL. COST NEW	AYB	EYB	ECON	FNCT		NORM	% COND
0500	01	4,389	105.4284	166.58	731,120	1984	1984	0	0	0	20.00	80.00

1 SFR CUST – 100% - 2019 Heated Area: 3848 HX Base Yr 2019

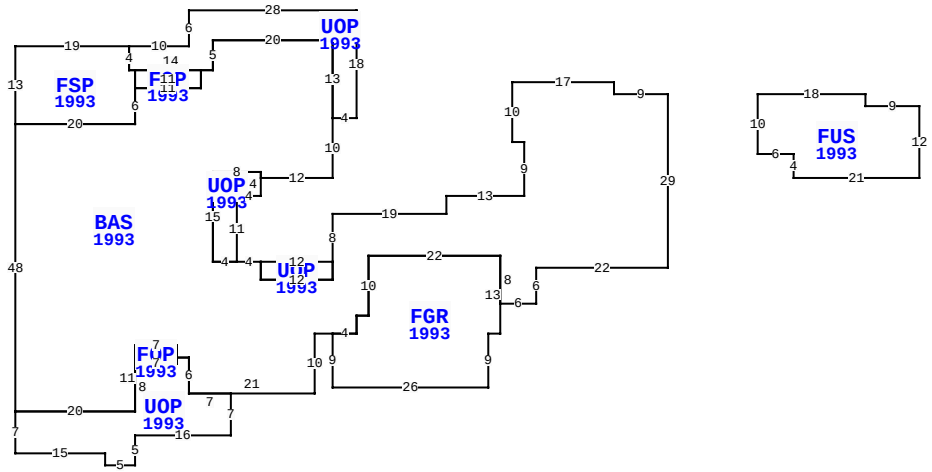

19 LAUREL OAK, FERNANDINA BEACH

BLD DATE		LGL DATE	
XF DATE		LAND DATE	05/07/2024 MLU
INC DATE		AG DATE	

VALUATION SUMMARY

VALUATION BY		STANDARD
Tax Group: 5	Tax Dist:	
BUILDING MARKET VALUE		584,896
TOTAL MARKET OB/XF VALUE		6,402
TOTAL LAND VALUE - MARKET		900,000
TOTAL MARKET VALUE		1,491,298
SOH/AGL Deduction		594,056
ASSESSED VALUE		897,242
TOTAL EXEMPTION VALUE	HX HB	50,722
BASE TAXABLE VALUE		846,520
TOTAL JUST VALUE		1,491,298
NCON VALUE		0
INCOME VALUE		
PREVIOUS YEAR MKT VALUE		1,465,353

PERMIT NUM	DESCRIPTION	AMT	ISSUED
R002584	REPAIR/RRF	0	06/01/2000
8273	ADDITION	99,900	07/30/1992

SALES DATA

OFF RECORD Number	DATE	TYPE INST	Q / U	V / I	RSN CD	SALE PRICE
2542/0685	2/18/2022	QC	U	I	11	100
GRANTOR: ANDERSON AMY L						
GRANTEE: ANDERSON AMY C						
2421/1556	3/03/2020	WD	U	I	11	100
GRANTOR: ANDERSON JANET H LIVI						
GRANTEE: ANDERSON AMY L						

BUILDING NOTES

BUILDING DIMENSIONS

BAS=[YR=1993] W9 N2 W17 S10 E2 S9 W13 S3 W19 S8 UOP=[YR=1993] W12 S3 E12 N3 $ S3 W12 N3 W4 UOP=[YR=1993] N11 E4 N4 W8 S15 E4 $ W4 N15 E8S1 E12 N10 UOP=[YR=1993] E4 N18 W28 S6 W10 FSP=[YR=1993] W19 S13 E20 N6 FOP=[YR=1993] E11 N3 W11 S3 $ N3 W1 N4 $ S4 E14 N5 E20 S13 $ N13 W20 S5 W2 S3 W11 S6 W20 S48 UOP=[YR=1993] S7E15S2 E5 N5 E16 N7W7 N6W2 FOP=[YR=1993] N2W7S3 E7N1 $ S1 W7S8W20 $E20N11E7S2E2S6 E21N10E3 FGR=[YR=1993] S9E26N9E2N13 W22S10W2S3 W4$E4N3E2N10E22S8E6 N6E22N29$ PTR=E15FUS=[YR=1993] E18S2 E9S12W21N4W6N10$W15$.

EXTRA FEATURES

LN	OB/XF CODE	DESCRIPTION	BLD	CAP	L	W	UNITS	UT	Adj R	ADJ UNIT PRICE	ORIG COND	YEAR ON	YEAR ACTUAL	Q	% COND	OB/XF MKT VALUE	NOTES
1	0811	CONCRETE B	0	100	40	20	800.00	SF	5.20	5.20	100	1992	1992	3	62	2,579	
2	0504	FP-ELECTRI	0	100	0	0	1.00	UT	2,000.00	2,000.00	100	1984	1984	3	54	1,080	
3	0820	WOOD WALK	0	100	45	3	135.00	SF	11.75	11.75	100	1984	1984	3	40	635	
4	1126	CB/STC 8"	0	100	0	0	308.00	SF	8.00	8.00	100	1984	1984	3	41	1,010	
5	0300	BOAT DCK W	0	100	6	8	48.00	SF	40.00	40.00	100	1984	1984	3	20	384	
6	1126	CB/STC 8"	0	100	18	8	144.00	SF	8.00	8.00	100	1992	1992	3	62	714	

LAND DESCRIPTION

TOTAL OB/XF 6,402

LN	USE CODE	CLS	LAND USE DESCRIPTION	CAP	RD	LOC ZONE	FRONT	DEPTH	TOT LND UTS	UNIT TYPE	DT	DPTH FACT	% COND	TOT ADJ	UNIT PRICE	ADJ UNIT PRICE	LAND VALUE	OTHER ADJUSTMENTS AND NOTES	YEAR	DENSITY	DECL	FRZ	YR	CONSRV
1	000100	C	RES	100		RSF-1	0.00	0.00	2.00	LT		1.00	1.00	1.00	450,000.00	450,000.00	900,000							

REVIEW DATE 05/12/2019 BY KBA Total Acres: 0.00 Total Land Value: 900,000 Market: 0 Agricultural: 0 Common: 900,000 PRINTED 07/30/2025 BY SYS