LOT 47
PT OR 1199/1881
BEACHWOOD VILLAGE UNIT 1

CABANISS EDA H
4705 ROLFE ROAD
RICHMOND, VA 23226

2025

01-6N-29-0201-0047-0000

NASSAU COUNTY PROPERTY

BUILDING CHARACTERISTICS

ELEMENT	CD	CONSTRUCTION
Exterior Wall	12	CEDAR 100
Roof Structur	03	GABLE/HIP 100
Roof Cover	03	COMP SHNGL 100
Interior Wall	05	DRYWALL 100
Interior Floo	14	CARPET 70
Interior Floo	11	CLAY TILE 30
Air Condition	03	CENTRAL 100
Heating Type	04	AIR DUCTED 100
Bedrooms		3 100
Bathrooms		3 100
Frame	02	WOOD FRAME 100
Stories	2.	2. 100
Units		0 100
BUD8 Adjustme	05	DIST 1A 100
Occupancy	00	NONE 100
Quality	04	Quality Level 04
DOR CODE	0100	SINGLE FAMILY
MAP NUM		MKT AREA 10
NEIGHBORHOOD/LOC	10001.00	

AREA TYPE	TOTAL GROSS AREA	PCT OF BASE	YEAR	TOT ADJ AREA	SUBAREA MARKET VALUE
BAS	1,923	100	1993	1,923	285,002
FDG	462	60	1993	277	41,053
FEP	150	80	1993	120	17,785
FUS	581	100	1993	581	86,108
UOP	72	20	1993	14	2,075
UOP	316	20	1993	63	9,337
TOTALS	3,504			2,978	441,360

MARKET ADJUSTMENTS

TYPE	MDL	EFF. AREA	TOT ADJ PTS	EFF. BASE RATE	REPL. COST NEW	AYB	EYB	ECON	FNCT		NORM	% COND
0500	01	2,978	114.3933	180.74	538,244	1984	1988	0	0	0	18.00	82.00

1 SFR CUST – 0% - 0 Heated Area: 2504 HX Base Yr

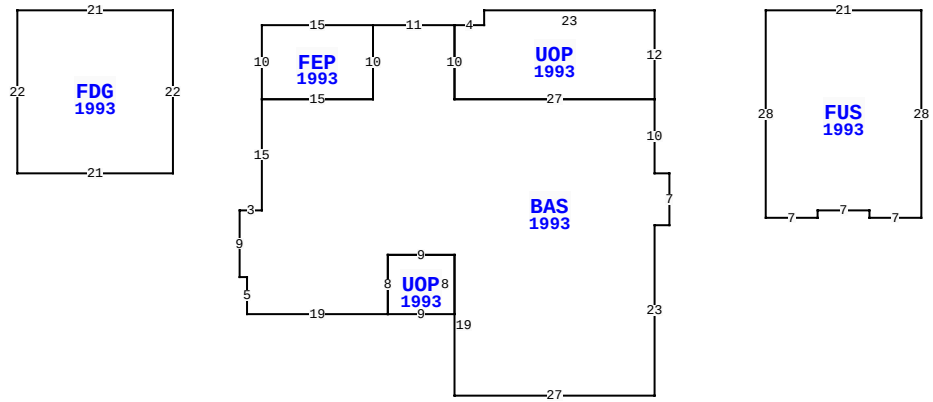

9 BEACH WOOD RD, FERNANDINA BEACH

BLD DATE		LGL DATE	
XF DATE		LAND DATE	03/14/2024 MLU
INC DATE		AG DATE	

VALUATION SUMMARY

VALUATION BY	STANDARD
Tax Group: 5	Tax Dist:
BUILDING MARKET VALUE	441,360
TOTAL MARKET OB/XF VALUE	4,207
TOTAL LAND VALUE - MARKET	500,000
TOTAL MARKET VALUE	945,567
SOH/AGL Deduction	132,302
ASSESSED VALUE	813,265
TOTAL EXEMPTION VALUE	0
BASE TAXABLE VALUE	813,265
TOTAL JUST VALUE	945,567
NCON VALUE	0
INCOME VALUE	
PREVIOUS YEAR MKT VALUE	926,041

PERMIT NUM	DESCRIPTION	AMT	ISSUED
B9502110	REPAIR/RRF	900	07/01/1995

SALES DATA

OFF RECORD Number	DATE	TYPE INST	Q / U	V / I	RSN CD	SALE PRICE
1199/1881	1/07/2004	WD	Q	I	01	684,500
GRANTOR: CABANISS ROBERT W JR						
GRANTEE: CABANISS EDA H						
0658/0969	5/18/1992	WD	Q	I		220,000
GRANTOR: BRACKETT CHRIS & PAT						
GRANTEE: CABANISS ROB & EDA						

BUILDING NOTES

BUILDING DIMENSIONS

UOP=[YR=1993] W23 S2 W4 BAS=[YR=1993] W11 FEP=[YR=1993] W15 S10 E15 N10$ S10 W15 S15 W3 S9 E1 S5 E19 UOP=[YR=1993] E9 N8 W9 S8$ N8 E9 S19 E27 N23 E2 N7 W2 N10 W27 N10$ S10 E27 N12$ PTR=E15 FUS=[YR=1993] E21 S28 W7 N1 W7 S1 W7 N28$ W15$ PTR=W65 FDG=[YR=1993] W21 S22 E21 N22$ E65$.

EXTRA FEATURES

LN	OB/XF CODE	DESCRIPTION	BLD	CAP	L	W	UNITS	UT	Adj R	ADJ UNIT PRICE	ORIG COND	YEAR ON	YEAR ACTUAL	Q	% COND	OB/XF MKT VALUE	NOTES
1	0811	CONCRETE B	0	0	0	0	947.00	SF	5.20	5.20	100	1984	1984	3	41	2,019	
2	0504	FP-ELECTRI	0	0	0	0	1.00	UT	2,000.00	2,000.00	100	1984	1984	3	54	1,080	
3	0810	CONCRETE A	0	0	0	0	268.00	SF	6.50	6.50	100	1984	1984	3	41	714	
4	1122	CB 6"	0	0	0	0	92.00	SF	5.85	5.85	100	1984	1984	3	41	221	
5	0446	BOX FNC 6'	0	0	0	0	12.00	LF	20.00	20.00	100	1984	1984	3	20	48	
6	0810	CONCRETE A	0	0	0	0	36.00	SF	6.50	6.50	100	1984	1984	3	41	96	
7	0445	BOX FNC 5'	0	0	0	0	18.00	LF	8.10	8.10	100	1984	1984	3	20	29	

LAND DESCRIPTION

TOTAL OB/XF 4,207

LN	USE CODE	CLS	LAND USE DESCRIPTION	CAP	RD	LOC ZONE	FRONT	DEPTH	TOT LND UTS	UNIT TYPE	DT	DPTH FACT	% COND	TOT ADJ	UNIT PRICE	ADJ UNIT PRICE	LAND VALUE	OTHER ADJUSTMENTS AND NOTES	YEAR	DENSITY	DECL	FRZ	YR	CONSRV
1	000100	C	RES	0		RSF-1	0.00	0.00	1.00	LT		1.00	1.00	1.00	500,000.00	500,000.00	500,000							

REVIEW DATE 05/12/2019 BY KBA Total Acres: 0.00 Total Land Value: 500,000 Market: 0 Agricultural: 0 Common: 500,000 PRINTED 07/30/2025 BY SYS