LOT 34
BEACHWOOD VILLAGE UNIT 1
PB 4/25-27

BARRETT THOMAS G & PHYLLIS A
19 RAILROAD VINE RD
FERNANDINA BEACH, FL 32034

2025

01-6N-29-0201-0034-0000

BUILDING CHARACTERISTICS

ELEMENT	CD	CONSTRUCTION
Exterior Wall	14	WD SHINGLE 100
Roof Structur	03	GABLE/HIP 100
Roof Cover	03	COMP SHNGL 100
Interior Wall	05	DRYWALL 100
Interior Floo	12	HARDWOOD 70
Interior Floo	14	CARPET 30
Air Condition	03	CENTRAL 100
Heating Type	04	AIR DUCTED 100
Bedrooms		3 100
Bathrooms		2 100
Frame	02	WOOD FRAME 100
Stories	1.	1. 100
Units		0 100
Occupancy	00	NONE 100
Quality	04	Quality Level 04
DOR CODE	0100	SINGLE FAMILY
MAP NUM		MKT AREA 10
NEIGHBORHOOD/LOC	10001.00	

AREA TYPE	TOTAL GROSS AREA	PCT OF BASE	YEAR	TOT ADJ AREA	SUBAREA MARKET VALUE
BAS	2,877	100	1993	2,877	391,502
DCK	14	10	2014	1	136
FGR	516	55	1993	284	38,647
FOP	80	30	1993	24	3,266
FUS	252	100	1993	252	34,292
UOP	63	20	1993	13	1,769
UOP	728	20	2025	146	19,868
TOTALS	4,530			3,597	489,480

MARKET ADJUSTMENTS

TYPE	MDL	EFF. AREA	TOT ADJ PTS	EFF. BASE RATE	REPL. COST NEW	AYB	EYB	ECON	FNCT		NORM	% COND
0500	01	3,597	102.5325	162.00	582,714	1992	1992	0	0	0	16.00	84.00

1 SFR CUST – 0% - 0 Heated Area: 3129 HX Base Yr

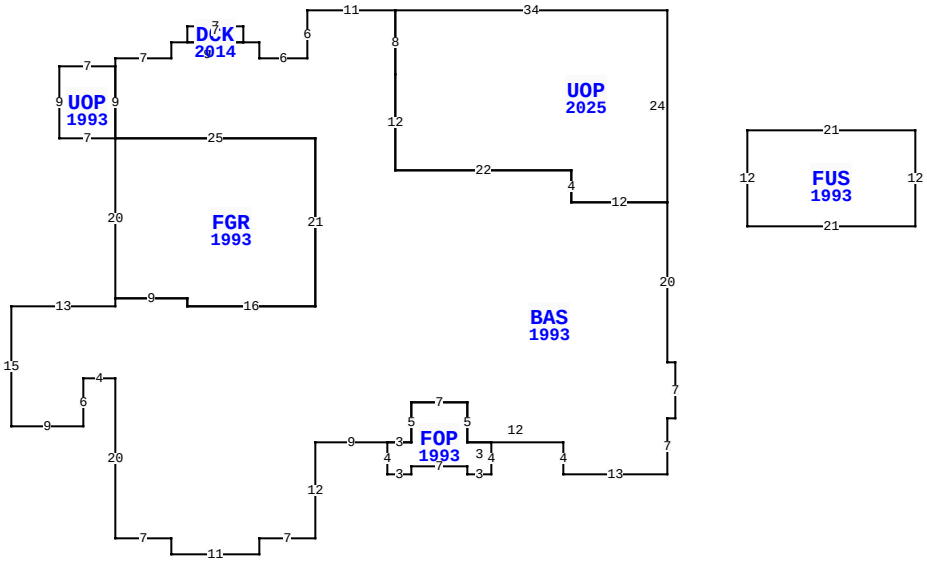

BLD DATE		LGL DATE	
XF DATE		LAND DATE	03/14/2024 MLU
INC DATE		AG DATE	

19 RAILROAD VINE, FERNANDINA BEACH

NASSAU COUNTY PROPERTY

PAGE 1 of 1 5

VALUATION SUMMARY

VALUATION BY	STANDARD
Tax Group: 5	Tax Dist:
BUILDING MARKET VALUE	489,480
TOTAL MARKET OB/XF VALUE	24,724
TOTAL LAND VALUE - MARKET	500,000
TOTAL MARKET VALUE	1,014,204
SOH/AGL Deduction	70,998
ASSESSED VALUE	943,206
TOTAL EXEMPTION VALUE	0
BASE TAXABLE VALUE	943,206
TOTAL JUST VALUE	1,014,204
NCON VALUE	18,643
INCOME VALUE	
PREVIOUS YEAR MKT VALUE	974,015

PERMIT NUM	DESCRIPTION	AMT	ISSUED
B230016501	PTO,SK,FP	25,000	12/28/2023
20216945	REMODEL	130,000	08/01/2021
B1428584	ROTDECK	25,000	04/01/2014
R023956	REPAIR/RRF	2,000	03/01/2002
7492	NEW CONSTR	150,000	08/27/1991

SALES DATA

OFF RECORD Number	DATE	TYPE INST	Q U	V I	RSN CD	SALE PRICE
2438/0447	2/11/2021	WD	Q	I	01	750,000
GRANTOR: AMELIE INVESTMENTS LT						
GRANTEE: BARRETT THOMAS G &						
1452/1440	10/17/2006	WD	Q	I		850,000
GRANTOR: MERLE PIERRE F V						
GRANTEE: AMELIE INVESTMENTS						

BUILDING NOTES

EXTRA FEATURES

LN	OB/XF CODE	DESCRIPTION	BLD	CAP	L	W	UNITS	UT	Adj R	ADJ UNIT PRICE	ORIG COND	YEAR ON	YEAR ACTUAL	Q	% COND	OB/XF MKT VALUE	NOTES
1	0500	FP-PRE FAB	0	0	0	0	1.00	UT	3,500.00	3,500.00	100	1992	1992	3	70	2,450	
2	0812	CONCRETE C	0	0	0	0	2,909.00	SF	4.00	4.00	100	1992	1992	3	62	7,214	
3	0855	CONC PAVER	0	0	0	0	1,006.00	SF	10.00	10.00	100	2025	2024		100	10,060	
4	0600	SUMMER KIT	0	0	0	0	1.00	UT	5,000.00	5,000.00	100	2025	2024		100	5,000	

BUILDING DIMENSIONS

BAS=[YR=1993;ORIG=-34,-7] N8 W11 S6 W6 N2 W2 W9 S2 W7 S1 S9 E25 S21 W16 N1 W9 S1 W13 S15 E9 N6 E4 S20 E7 S2 E11 N2 E7 N12 E9 E3 N5 E7 S5 E12 S4 E13 N7 E1 N7 W1 N20 W12 N4 W22 N12 $
FGR=[YR=1993;ORIG=-69,1] S20 E9 S1 E16 N21 W25 $
FUS=[YR=1993;ORIG=10,12] N12 E21 S12 W21 $
FOP=[YR=1993;ORIG=-35,39] S4 E3 N1 E7 S1 E3 N4 W3 N5 W7 S5 W3 $
UOP=[YR=1993;ORIG=-69,-8] W7 S9 E7 N9 $
DCK=[YR=2014;ORIG=-53,-11] N2 W7 S2 E7 $
PTR=[ORIG=0,0] N15 S15 $
UOP=[YR=2025;ORIG=-34,-15] S8 S12 E22 S4 E12 N24 W34 $
.

LAND DESCRIPTION

TOTAL OB/XF 24,724

LN	USE CODE	CLS	LAND USE DESCRIPTION	CAP	RD	LOC ZONE	FRONT	DEPTH	TOT LND UTS	UNIT TYPE	DT	DPTH FACT	% COND	TOT ADJ	UNIT PRICE	ADJ UNIT PRICE	LAND VALUE	OTHER ADJUSTMENTS AND NOTES	YEAR	DENSITY	DECL	FRZ	YR	CONSRV
1	000100	C	RES	0		RSF-1	0.00	0.00	1.00	LT		1.00	1.00	1.00	500,000.00	500,000.00	500,000							

REVIEW DATE 05/06/2024 BY HS Total Acres: 0.00 Total Land Value: 500,000 Market: 0 Agricultural: 0 Common: 500,000 PRINTED 07/30/2025 BY SYS