LOT 31
IN OR 2193/913
BEACHWOOD VILLAGE UNIT 1

MEEHAN BRIAN WILLIAM & KELLIE MCCAFFREY
18 BEACH WOOD RD
FERNANDINA BEACH, FL 32034

2025

01-6N-29-0201-0031-0000

NASSAU COUNTY PROPERTY

BUILDING CHARACTERISTICS

ELEMENT	CD	CONSTRUCTION
Exterior Wall	12	CEDAR 100
Roof Structur	03	GABLE/HIP 100
Roof Cover	03	COMP SHNGL 100
Interior Wall	05	DRYWALL 100
Interior Floo	14	CARPET 50
Interior Floo	15	HARDTILE 50
Air Condition	03	CENTRAL 100
Heating Type	04	AIR DUCTED 100
Bedrooms		4 100
Bathrooms		4 100
Frame	02	WOOD FRAME 100
Stories	2.	2. 100
Units		0 100
BUD8 Adjustme	05	DIST 1A 100
Quality	04	Quality Level 04

DOR CODE 0100 SINGLE FAMILY
MAP NUM | MKT AREA 10
NEIGHBORHOOD/LOC 10001.00

AREA TYPE	TOTAL GROSS AREA	PCT OF BASE	YEAR	TOT ADJ AREA	SUBAREA MARKET VALUE
BAS	2,255	100	1993	2,255	441,390
BAS	192	100	2008	192	37,582
FGR	750	55	1993	412	80,644
FOP	77	30	1993	23	4,502
FOP	124	30	1993	37	7,242
FSP	174	40	1993	70	13,702
FSP	174	40	1993	70	13,702
FUS	783	100	1993	783	153,263
UOP	642	20	2014	128	25,054
TOTALS	5,171			3,970	777,081

MARKET ADJUSTMENTS

TYPE	MDL	EFF. AREA	TOT ADJ PTS	EFF. BASE RATE	REPL. COST NEW	AYB	EYB	ECON	FNCT		NORM	% COND
0500	11	3,970	140.7780	222.43	883,047	1983	2000	0	0	0	12.00	88.00

1 SFR CUST – 100% - 2019 Heated Area: 3230 HX Base Yr 2019

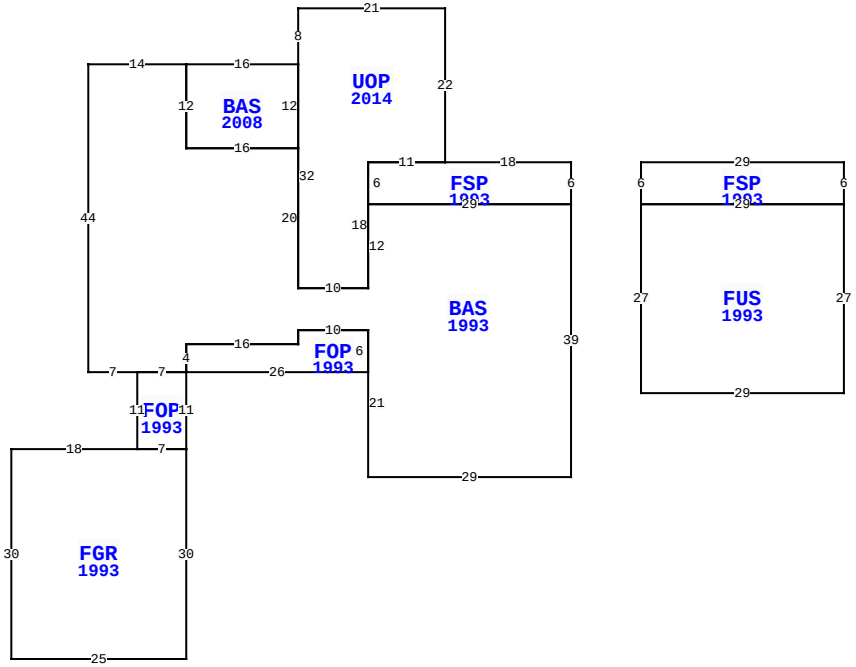

18 BEACH WOOD RD, FERNANDINA BEACH

BLD DATE	12/31/2008 DJ	LGL DATE	
XF DATE		LAND DATE	03/14/2024 MLU
INC DATE		AG DATE	

NASSAU COUNTY PROPERTY — VALUATION SUMMARY

VALUATION BY		STANDARD
Tax Group: 5	Tax Dist:	
BUILDING MARKET VALUE		777,081
TOTAL MARKET OB/XF VALUE		6,971
TOTAL LAND VALUE - MARKET		500,000
TOTAL MARKET VALUE		1,284,052
SOH/AGL Deduction		520,500
ASSESSED VALUE		763,552
TOTAL EXEMPTION VALUE	HX HB	50,722
BASE TAXABLE VALUE		712,830
TOTAL JUST VALUE		1,284,052
NCON VALUE		0
INCOME VALUE		
PREVIOUS YEAR MKT VALUE		1,249,392

PERMIT NUM	DESCRIPTION	AMT	ISSUED
B26135	REMODEL	3,000	06/01/2012

SALES DATA

OFF RECORD Number	DATE	TYPE INST	Q / U	V / I	RSN CD	SALE PRICE
2193/0913	4/20/2018	WD	Q	I	01	827,000
GRANTOR: SPENCE JEFFREY C & DA						
GRANTEE: MEEHAN BRIAN WILLIA						
2106/1363	3/07/2017	WD	Q	I	02	762,500
GRANTOR: MORRISON MICHAEL & PA						
GRANTEE: SPENCE JEFFREY C &						

BUILDING NOTES

BUILDING DIMENSIONS

FSP=[YR=1993] W18 UOP=[YR=2014] N22 W21 S8 BAS=[YR=2008] W16 BAS=[YR=1993] W14 S44E7 FOP=[YR=1993] S11 FGR=[YR=1993] W18 S30E25 N30 W7 $ E7N11W7$E7 FOP=[YR=1993] E26N6 W10 S2 W16 S4 $ N4 E16 N2 E10 S21 E29N39 W29 S12 W10 N20 W16 N12 $ S12 E16 N12$ S32 E10 N18 E11$ W11 S6 E29 N6 $ PTR= E10 FSP=[YR=1993] E29 S6 FUS=[YR=1993] S27 W29 N27 E29 $ W29 N6 $ W10 $.

EXTRA FEATURES

LN	OB/XF CODE	DESCRIPTION	BLD	CAP	L	W	UNITS	UT	Adj R	ADJ UNIT PRICE	ORIG COND	YEAR ON	YEAR ACTUAL	Q	% COND	OB/XF MKT VALUE	NOTES
1	0504	FP-ELECTRI	0	100	0	0	1.00	UT	2,000.00	2,000.00	100	1983	1983	3	51.5	1,030	
2	0811	CONCRETE B	0	100	0	0	1,000.00	SF	5.20	5.20	100	1983	1983	3	38	1,976	
3	0812	CONCRETE C	0	100	0	0	1,510.00	SF	4.00	4.00	100	1985	1985	3	44	2,658	
4	0850	PEBBLE WLK	0	100	0	0	307.00	SF	3.50	3.50	100	1983	1983	3	38	408	
5	1126	CB/STC 8"	0	100	0	0	276.00	SF	8.00	8.00	100	1983	1983	3	38	839	
6	0463	FENCE GATE	0	100	0	0	1.00	UT	300.00	300.00	100	1983	1983	3	20	60	

LAND DESCRIPTION

TOTAL OB/XF 6,971

LN	USE CODE	CLS	LAND USE DESCRIPTION	CAP	RD	LOC ZONE	FRONT	DEPTH	TOT LND UTS	UNIT TYPE	DT	DPTH FACT	% COND	TOT ADJ	UNIT PRICE	ADJ UNIT PRICE	LAND VALUE	OTHER ADJUSTMENTS AND NOTES	YEAR	DENSITY	DECL	FRZ	YR	CONSRV
1	000100	C	RES	100		RSF-1	0.00	0.00	1.00	LT		1.00	1.00	1.00	500,000.00	500,000.00	500,000							

REVIEW DATE 05/12/2019 BY KBA Total Acres: 0.00 Total Land Value: 500,000 Market: 0 Agricultural: 0 Common: 500,000 PRINTED 07/30/2025 BY SYS