LOT 8
BEACHWOOD VILLAGE UNIT 1
PB 4/25-27

COVIELLO MICHAEL F & JEANETTE L/E/
14 WAX MYRTLE ROAD
FERNANDINA BEACH, FL 32034

2025

01-6N-29-0201-0008-0000

BUILDING CHARACTERISTICS

ELEMENT	CD	CONSTRUCTION
Exterior Wall	10	ABOVE AVG 100
Roof Structur	08	IRREGULAR 100
Roof Cover	03	COMP SHNGL 100
Interior Wall	05	DRYWALL 100
Interior Floo	14	CARPET 60
Interior Floo	11	CLAY TILE 40
Air Condition	03	CENTRAL 100
Heating Type	04	AIR DUCTED 100
Bedrooms		3 100
Bathrooms		2.5 100
Frame	02	WOOD FRAME 100
Stories	1.	1. 100
Units		0 100
Occupancy	00	NONE 100
Quality	04	Quality Level 04
DOR CODE	0100	SINGLE FAMILY
MAP NUM		MKT AREA 10
NEIGHBORHOOD/LOC	10001.00	

AREA TYPE	TOTAL GROSS AREA	PCT OF BASE	YEAR	TOT ADJ AREA	SUBAREA MARKET VALUE
BAS	2,570	100	2000	2,570	405,057
FGR	583	55	2000	321	50,593
FOP	84	30	2000	25	3,940
FOP	84	30	2000	25	3,940
FOP	112	30	2000	34	5,359
UOP	108	20	2000	22	3,467
TOTALS	3,541			2,997	472,356

MARKET ADJUSTMENTS

TYPE	MDL	EFF. AREA	TOT ADJ PTS	EFF. BASE RATE	REPL. COST NEW	AYB	EYB	ECON	FNCT		NORM	% COND
0500	01	2,997	112.7154	178.09	533,736	2000	2000	0	0	0	11.50	88.50

1 SFR CUST – 100% - 2019 Heated Area: 2570 HX Base Yr 2019

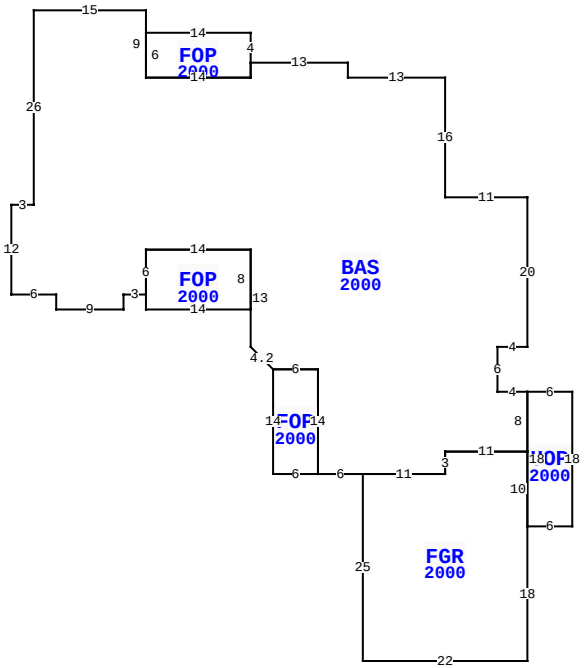

14 WAX MYRTLE RD, FERNANDINA BEACH

BLD DATE		LGL DATE	
XF DATE		LAND DATE	03/14/2024 MLU
INC DATE		AG DATE	

NASSAU COUNTY PROPERTY

PAGE 1 of 1 5

VALUATION SUMMARY

VALUATION BY		STANDARD
Tax Group: 5	Tax Dist:	
BUILDING MARKET VALUE		472,356
TOTAL MARKET OB/XF VALUE		5,018
TOTAL LAND VALUE - MARKET		450,000
TOTAL MARKET VALUE		927,374
SOH/AGL Deduction		396,690
ASSESSED VALUE		530,684
TOTAL EXEMPTION VALUE	HX HB	50,722
BASE TAXABLE VALUE		479,962
TOTAL JUST VALUE		927,374
NCON VALUE		0
INCOME VALUE		
PREVIOUS YEAR MKT VALUE		906,108

PERMIT NUM	DESCRIPTION	AMT	ISSUED
B26156	REMODEL	9,500	06/01/2012
B9906508	NEW CONSTR	198,000	10/01/1999

SALES DATA

OFF RECORD Number	DATE	TYPE INST	Q / U	V / I	RSN CD	SALE PRICE
2369/0535	6/16/2020	QC	U	I	11	100
GRANTOR: COVIELLO MICHAEL F &						
GRANTEE: COVIELLO MICHAEL F						
2197/0955	5/21/2018	WD	Q	I	02	570,000
GRANTOR: WITT JEFFREY R & JOAN						
GRANTEE: COVIELLO MICHAEL F						

BUILDING NOTES

BUILDING DIMENSIONS

BAS=[YR=2000] W11 N16 W13 N2 W13 FOP=[YR=2000] N4 W14 S6 E14 N2 $ S2 W14 N9 W15 S26 W3 S12 E6 S2 E9 N2 E3 FOP=[YR=2000] S2 E14 N8 W14 S6 $ N6 E14 S13 R3 D3 FOP=[YR=2000] S14 E6 N14 W6 $ E6 S14 E6 FGR=[YR=2000] S25 E22 N18 UOP=[YR=2000] E6 N18 W6 S18 $ N10 W11 S3 W11 $ E11 N3 E11 N8 W4 N6 E4 N20 $.

EXTRA FEATURES

LN	OB/XF CODE	DESCRIPTION	BLD	CAP	L	W	UNITS	UT	Adj R	ADJ UNIT PRICE	ORIG COND	YEAR ON	YEAR ACTUAL	Q	% COND	OB/XF MKT VALUE	NOTES
1	0812	CONCRETE C	0	100	0	0	1,238.00	SF	4.00	4.00	100	2000	2000	3	77	3,813	
2	0810	CONCRETE A	0	100	25	4	100.00	SF	6.50	6.50	100	2000	2000	3	77	501	
3	0446	BOX FNC 6'	0	100	0	0	140.00	LF	20.00	20.00	100	2000	2000	3	20	560	
4	0463	FENCE GATE	0	100	0	0	1.00	UT	300.00	300.00	100	2000	2000	3	48	144	

LAND DESCRIPTION

TOTAL OB/XF 5,018

LN	USE CODE	CLS	LAND USE DESCRIPTION	CAP	RD	LOC ZONE	FRONT	DEPTH	TOT LND UTS	UNIT TYPE	DT	DPTH FACT	% COND	TOT ADJ	UNIT PRICE	ADJ UNIT PRICE	LAND VALUE	OTHER ADJUSTMENTS AND NOTES	YEAR	DENSITY	DECL	FRZ	YR	CONSRV
1	000100	C	RES	100		RSF-1	0.00	0.00	1.00	LT		1.00	1.00	0.90	500,000.00	450,000.00	450,000							

REVIEW DATE 01/16/2024 BY KBA Total Acres: 0.00 Total Land Value: 450,000 Market: 0 Agricultural: 0 Common: 450,000 PRINTED 07/30/2025 BY SYS