LOT 5
BEACHWOOD VILLAGE UNIT 1
PB 4/25-27

**ROUNDS JASON H/BILLINGSLEY ABBIE E**
8 WAX MYRTLE RD
FERNANDINA BEACH, FL 32034

**2025**

**01-6N-29-0201-0005-0000**

## BUILDING CHARACTERISTICS

| ELEMENT | CD | CONSTRUCTION |
|---|---|---|
| Exterior Wall | 31 | HARDIE BRD 100 |
| Roof Structur | 03 | GABLE/HIP 100 |
| Roof Cover | 03 | COMP SHNGL 90 |
| Roof Cover | 13 | STAND SEAM 10 |
| Interior Wall | 05 | DRYWALL 100 |
| Interior Floo | 12 | HARDWOOD 90 |
| Interior Floo | 11 | CLAY TILE 10 |
| Air Condition | 03 | CENTRAL 100 |
| Heating Type | 04 | AIR DUCTED 100 |
| Bedrooms | | 3 100 |
| Bathrooms | | 3.5 100 |
| Frame | 02 | WOOD FRAME 100 |
| Stories | 2. | 2. 100 |
| Units | | 0 100 |
| Occupancy | 00 | NONE 100 |
| Quality | 04 | Quality Level 04 |
| DOR CODE | 0100 | SINGLE FAMILY |
| MAP NUM | | MKT AREA 10 |
| NEIGHBORHOOD/LOC | 10001.00 | |

| AREA TYPE | TOTAL GROSS AREA | PCT OF BASE | YEAR | TOT ADJ AREA | SUBAREA MARKET VALUE |
|---|---|---|---|---|---|
| BAS | 2,560 | 100 | 2025 | 2,560 | 551,168 |
| FGR | 462 | 55 | 2025 | 254 | 54,686 |
| FOP | 253 | 30 | 2025 | 76 | 16,363 |
| FOP | 312 | 30 | 2025 | 94 | 20,238 |
| FST | 54 | 55 | 2025 | 30 | 6,459 |
| FUS | 676 | 100 | 2025 | 676 | 145,543 |
| SFB | 72 | 80 | 2025 | 58 | 12,487 |
| STP | 33 | 10 | 2025 | 3 | 646 |
| STR | 104 | 10 | 2025 | 10 | 2,153 |
| UOP | 161 | 20 | 2025 | 32 | 6,890 |
| TOTALS | 4,687 | | | 3,793 | 816,633 |

## MARKET ADJUSTMENTS

| TYPE | MDL | EFF. AREA | TOT ADJ PTS | EFF. BASE RATE | REPL. COST NEW | AYB | EYB | ECON | FNCT | | NORM | % COND |
|---|---|---|---|---|---|---|---|---|---|---|---|---|
| 0500 | 11 | 3,793 | 136.2636 | 215.30 | 816,633 | 2024 | 2024 | 0 | 0 | 0 | 0.00 | 100.00 |

1 SFR CUST – 100% - 2025 Heated Area: 3294 HX Base Yr 2025

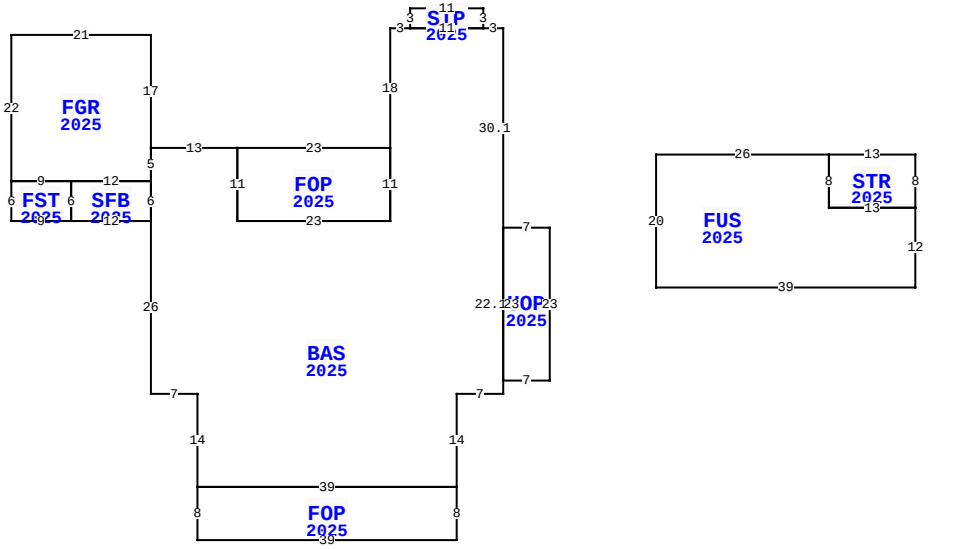


8 WAX MYRTLE RD, FERNANDINA BEACH

| | | | |
|---|---|---|---|
| BLD DATE | | LGL DATE | |
| XF DATE | | LAND DATE | 03/14/2024 MLU |
| INC DATE | | AG DATE | |

## NASSAU COUNTY PROPERTY

PAGE 1 of 1 5

### VALUATION SUMMARY

| | | |
|---|---|---|
| VALUATION BY | | STANDARD |
| Tax Group: 5 | Tax Dist: | |
| BUILDING MARKET VALUE | | 816,633 |
| TOTAL MARKET OB/XF VALUE | | 31,040 |
| TOTAL LAND VALUE - MARKET | | 450,000 |
| TOTAL MARKET VALUE | | 1,297,673 |
| SOH/AGL Deduction | | 0 |
| ASSESSED VALUE | | 1,297,673 |
| TOTAL EXEMPTION VALUE | HX HB | 50,722 |
| BASE TAXABLE VALUE | | 1,246,951 |
| TOTAL JUST VALUE | | 1,297,673 |
| NCON VALUE | | 847,673 |
| INCOME VALUE | | |
| PREVIOUS YEAR MKT VALUE | | 450,000 |

| PERMIT NUM | DESCRIPTION | AMT | ISSUED |
|---|---|---|---|
| CO240008292 | NSFR (T)4188 (H)3 | 510,347 | 07/16/2024 |
| 220008162 | 4188T 3181H 445G | 510,347 | 01/04/2023 |

## SALES DATA

| OFF RECORD Number | DATE | TYPE INST | Q / U | V / I | RSN CD | SALE PRICE |
|---|---|---|---|---|---|---|
| 2562/1535 | 5/11/2022 | WD | U | V | 37 | 300,000 |
| GRANTOR: HOOT OWL HOMES LLC | | | | | | |
| GRANTEE: ROUNDS JASON H & AB | | | | | | |
| 2395/0677 | 9/23/2020 | WD | Q | V | 01 | 300,000 |
| GRANTOR: MCNAMARA TIMOTHY CONN | | | | | | |
| GRANTEE: HOOT OWL HOMES LLC | | | | | | |

## BUILDING NOTES

## EXTRA FEATURES

| LN | OB/XF CODE | DESCRIPTION | BLD | CAP | L | W | UNITS | UT | Adj R | ADJ UNIT PRICE | ORIG COND | YEAR ON | YEAR ACTUAL | Q | % COND | OB/XF MKT VALUE | NOTES |
|---|---|---|---|---|---|---|---|---|---|---|---|---|---|---|---|---|---|
| 1 | 0501 | FP-AVERAGE | 0 | 100 | 0 | 0 | 1.00 | UT | 5,000.00 | 5,000.00 | 100 | 2025 | 2024 | | 100 | 5,000 | |
| 2 | 0855 | CONC PAVER | 0 | 100 | 0 | 0 | 2,400.00 | SF | 10.00 | 10.00 | 100 | 2025 | 2024 | | 100 | 24,000 | |
| 3 | 0855 | CONC PAVER | 0 | 100 | 0 | 0 | 204.00 | SF | 10.00 | 10.00 | 100 | 2025 | 2024 | | 100 | 2,040 | |

## BUILDING DIMENSIONS

BAS=[YR=2025;ORIG=0,-10] W3 W11 W3 S18 S11 W23 N11 W13 S5 S6 S26 E7 S14 E39 N14 E7 U2.1L0 U22.10L0 U30.1R0 $
FUS=[YR=2025;ORIG=23,9] E26 S8 E13 S12 W39 N20 $
STR=[YR=2025;ORIG=49,9] E13 S8 W13 N8 $
FOP=[YR=2025;ORIG=-40,8] E23 S11 W23 N11 $
SFB=[YR=2025;ORIG=-65,13] E12 S6 W12 N6 $
FST=[YR=2025;ORIG=-74,13] E9 S6 W9 N6 $
FGR=[YR=2025;ORIG=-74,-9] E21 S17 S5 W12 W9 N22 $
FOP=[YR=2025;ORIG=-46,59] E39 S8 W39 N8 $
UOP=[YR=2025;ORIG=0,20] E7 S23 W7 N23 $
STP=[YR=2025;ORIG=-14,-13] E11 S3 W11 N3 $
.

## LAND DESCRIPTION

TOTAL OB/XF 31,040

| LN | USE CODE | CLS | LAND USE DESCRIPTION | CAP | RD | LOC ZONE | FRONT | DEPTH | TOT LND UTS | UNIT TYPE | DT | DPTH FACT | % COND | TOT ADJ | UNIT PRICE | ADJ UNIT PRICE | LAND VALUE | OTHER ADJUSTMENTS AND NOTES | YEAR | DENSITY | DECL | FRZ | YR | CONSRV |
|---|---|---|---|---|---|---|---|---|---|---|---|---|---|---|---|---|---|---|---|---|---|---|---|---|
| 1 | 000100 | C | RES | 100 | | RSF-1 | 0.00 | 0.00 | 1.00 | LT | | 1.00 | 1.00 | 0.90 | 500,000.00 | 450,000.00 | 450,000 | | | | | | | |

REVIEW DATE 05/06/2024 BY DJ Total Acres: 0.00 Total Land Value: 450,000 Market: 0 Agricultural: 0 Common: 450,000 PRINTED 07/30/2025 BY SYS