LOT 60
IN OR 2034/687
BEACH WALKER VILLAGE

1 GWT LLC
158 TWIN LANES RD
EASTON, CT 06612

2025

01-6N-29-0200-0060-0000

NASSAU COUNTY PROPERTY

BUILDING CHARACTERISTICS

ELEMENT	CD	CONSTRUCTION
Exterior Wall	16	WD FR STUC 100
Roof Structur	03	GABLE/HIP 100
Roof Cover	03	COMP SHNGL 100
Interior Wall	05	DRYWALL 100
Interior Floo	11	CLAY TILE 50
Interior Floo	14	CARPET 50
Air Condition	03	CENTRAL 100
Heating Type	04	AIR DUCTED 100
Bedrooms		3 100
Bathrooms		3 100
Frame	02	WOOD FRAME 100
Stories	2.	2. 100
Units		0 100
BUD8 Adjustme	05	DIST 1A 100
Quality	03	Quality Level 03
DOR CODE	0100	SINGLE FAMILY
MAP NUM		MKT AREA 10
NEIGHBORHOOD/LOC	10001.00	

AREA TYPE	TOTAL GROSS AREA	PCT OF BASE	YEAR	TOT ADJ AREA	SUBAREA MARKET VALUE
BAS	2,590	100	1993	2,590	437,328
FEP	56	80	1993	45	7,598
FGR	484	55	1993	266	44,915
FOP	80	30	1993	24	4,053
FST	122	55	1993	67	11,314
FUS	1,048	100	1993	1,048	176,957
PTO	35	5	1993	2	337
TOTALS	4,415			4,042	682,502

MARKET ADJUSTMENTS

TYPE	MDL	EFF. AREA	TOT ADJ PTS	EFF. BASE RATE	REPL. COST NEW	AYB	EYB	ECON	FNCT		NORM	% COND
0500	11	4,042	125.7300	198.65	802,943	1974	1994	0	0	0	15.00	85.00

1 SFR CUST – 0% - 0 Heated Area: 3638 HX Base Yr

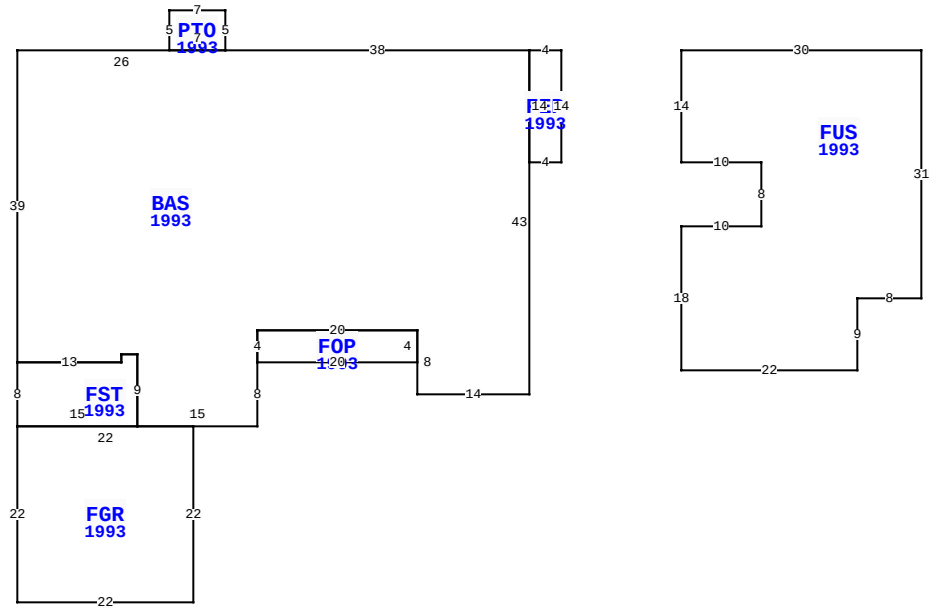

BLD DATE	
XF DATE	
INC DATE	
LGL DATE	
LAND DATE	03/14/2024 MLU
AG DATE	

1 GREEN WINGED TEAL RD, FERNANDINA BEACH

VALUATION SUMMARY

VALUATION BY	STANDARD
Tax Group: 5	Tax Dist:
BUILDING MARKET VALUE	682,502
TOTAL MARKET OB/XF VALUE	15,181
TOTAL LAND VALUE - MARKET	375,000
TOTAL MARKET VALUE	1,072,683
SOH/AGL Deduction	246,994
ASSESSED VALUE	825,689
TOTAL EXEMPTION VALUE	0
BASE TAXABLE VALUE	825,689
TOTAL JUST VALUE	1,072,683
NCON VALUE	0
INCOME VALUE	
PREVIOUS YEAR MKT VALUE	1,042,229

PERMIT NUM	DESCRIPTION	AMT	ISSUED
B1632292	REMODEL	0	05/11/2016
8678	ADDITION	154,550	02/09/1993

SALES DATA

OFF RECORD Number	DATE	TYPE INST	Q U	V I	RSN CD	SALE PRICE
2034/0687	3/11/2016	WD	Q	I	01	515,000
GRANTOR: SANDERS CURTIS & DORO						
GRANTEE: 1 GWT LLC						
2024/1147	7/22/2010	WD	U	I	11	100
GRANTOR: SANDERS CURTIS R & DO						
GRANTEE: SANDERS CURTIS & DO						

BUILDING NOTES

BUILDING DIMENSIONS

FEP=[YR=1993] W4 BAS=[YR=1993] W38 PTO=[YR=1993] N5 W7 S5 E7$ W26 S39 FST=[YR=1993] S8 FGR=[YR=1993] S22 E22 N22 W22$ E15 N9 W2 S1 W13$ E13N1 E2 S9 E15 N8 FOP=[YR=1993] E20 N4 W20S4$ N4 E20 S8 E14 N43$ S14 E4 N14$ PTR=E15 FUS=[YR=1993] E30 S31 W8 S9W22 N18 E10 N8 W10 N14$ W15$.

EXTRA FEATURES

LN	OB/XF CODE	DESCRIPTION	BLD	CAP	L	W	UNITS	UT	Adj R	ADJ UNIT PRICE	ORIG COND	YEAR ON	YEAR ACTUAL	Q	% COND	OB/XF MKT VALUE	NOTES
1	0504	FP-ELECTRI	0	0	0	0	1.00	UT	2,000.00	2,000.00	100	1974	1974	3	32	640	
2	0812	CONCRETE C	0	0	0	0	1,242.00	SF	4.00	4.00	100	1993	1993	3	64	3,180	
3	0855	CONC PAVER	0	0	0	0	1,124.00	SF	10.00	10.00	100	2016	2016	3	95	10,678	
4	0445	BOX FNC 5'	0	0	0	0	20.00	LF	8.10	8.10	100	2016	2016	3	70	113	
5	0855	CONC PAVER	0	0	6	10	60.00	SF	10.00	10.00	100	2016	2016	3	95	570	

LAND DESCRIPTION

TOTAL OB/XF 15,181

LN	USE CODE	CLS	LAND USE DESCRIPTION	CAP	RD	LOC ZONE	FRONT	DEPTH	TOT LND UTS	UNIT TYPE	DT	DPTH FACT	% COND	TOT ADJ	UNIT PRICE	ADJ UNIT PRICE	LAND VALUE	OTHER ADJUSTMENTS AND NOTES	YEAR	DENSITY	DECL	FRZ	YR	CONSRV
1	000100	C	RES	0		RG-2	0.00	0.00	1.00	LT		1.00	1.00	0.75	500,000.00	375,000.00	375,000							

REVIEW DATE 05/12/2019 BY KBA Total Acres: 0.00 Total Land Value: 375,000 Market: 0 Agricultural: 0 Common: 375,000 PRINTED 07/30/2025 BY SYS