LOT 53
BEACH WALKER VILLAGE PB 4/14

SCHAEFER HADLEY P & MARY ELLEN L/E/
12 GREEN WINGED TEAL ROAD
FERNANDINA BEACH, FL 32034

2025

01-6N-29-0200-0053-0000

BUILDING CHARACTERISTICS

ELEMENT	CD	CONSTRUCTION
Exterior Wall	12	CEDAR 80
Exterior Wall	16	WD FR STUC 20
Roof Structur	03	GABLE/HIP 100
Roof Cover	06	ASB SHINGL 100
Interior Wall	05	DRYWALL 90
Interior Wall	08	DECORATIVE 10
Interior Floo	14	CARPET 90
Interior Floo	13	LVT/LAMNT 10
Air Condition	03	CENTRAL 100
Heating Type	04	AIR DUCTED 100
Bedrooms		3 100
Bathrooms		2.5 100
Frame	02	WOOD FRAME 100
Stories	1.	1. 100
Units		0 100
BUD8 Adjustme	05	DIST 1A 100
Quality	03	Quality Level 03
DOR CODE	0100	SINGLE FAMILY
MAP NUM		MKT AREA 10
NEIGHBORHOOD/LOC	10001.00	

AREA TYPE	TOTAL GROSS AREA	PCT OF BASE	YEAR	TOT ADJ AREA	SUBAREA MARKET VALUE
BAS	1,620	100	1993	1,620	224,499
FSP	143	40	1993	57	7,899
UOP	90	20	1993	18	2,494
UOP	172	20	1993	34	4,712
UOP	192	20	1993	38	5,266
TOTALS	2,217			1,767	244,871

MARKET ADJUSTMENTS

TYPE	MDL	EFF. AREA	TOT ADJ PTS	EFF. BASE RATE	REPL. COST NEW	AYB	EYB	ECON	FNCT		NORM	% COND
0500	01	1,767	117.1000	185.02	326,930	1974	1974	0	0	0	25.10	74.90

1 SFR CUST – 100% - 2002 Heated Area: 1620 HX Base Yr 2002

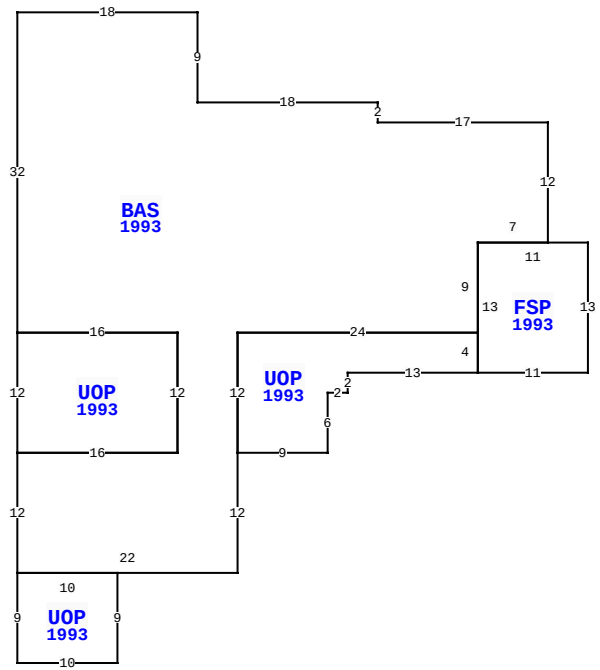

12 GREEN WINGED TEAL RD, FERNANDINA BEACH

BLD DATE		LGL DATE	
XF DATE		LAND DATE	03/14/2024 MLU
INC DATE		AG DATE	

NASSAU COUNTY PROPERTY

PAGE 1 of 2 5

VALUATION SUMMARY

VALUATION BY		STANDARD
Tax Group: 5	Tax Dist:	
BUILDING MARKET VALUE		244,871
TOTAL MARKET OB/XF VALUE		4,584
TOTAL LAND VALUE - MARKET		500,000
TOTAL MARKET VALUE		749,455
SOH/AGL Deduction		396,368
ASSESSED VALUE		353,087
TOTAL EXEMPTION VALUE	HX HB	50,722
BASE TAXABLE VALUE		302,365
TOTAL JUST VALUE		749,455
NCON VALUE		0
INCOME VALUE		
PREVIOUS YEAR MKT VALUE		738,812

PERMIT NUM	DESCRIPTION	AMT	ISSUED
P004001	REMODEL	2,800	04/01/2000

SALES DATA

OFF RECORD Number	DATE	TYPE INST	Q U	V I	RSN CD	SALE PRICE
2744/684	10/18/2024	WD	U	I	11	100
GRANTOR: SCHAEFER HADLEY P & M						
GRANTEE: SCHAEFER SCOTT						
0876/1534	3/31/1999	WD	Q	I		210,000
GRANTOR: WRIGHT GERALD R & CAR						
GRANTEE: SCHAEFER HADLEY P &						

BUILDING NOTES

BUILDING DIMENSIONS

BAS=[YR=1993] W17 N2 W18 N9 W18 S32 UOP=[YR=1993] S12 E16 N12 W16 $ E16 S12 W16 S12 UOP=[YR=1993] S9 E10 N9 W10 $ E22 N12 UOP=[YR=1993] E9 N6 E2 N2 E13 FSP=[YR=1993] E11 N13 W11 S13 $ N4 W24 S12 $ N12 E24 N9 E7 N12 $.

EXTRA FEATURES

LN	OB/XF CODE	DESCRIPTION	BLD	CAP	L	W	UNITS	UT	Adj R	ADJ UNIT PRICE	ORIG COND	YEAR ON	YEAR ACTUAL	Q	% COND	OB/XF MKT VALUE	NOTES
1	0802	ASPHALT B	0	100	39	18	702.00	SF	2.40	2.40	100	1974	1974	3	50	842	
2	1242	WD DECK A	0	100	0	0	444.00	SF	10.00	10.00	100	1985	1985	3	20	888	
3	1126	CB/STC 8"	0	100	0	0	402.00	SF	8.00	8.00	100	1974	1974	3	24	772	
4	0940	SHEDS/PORT	0	100	0	0	40.00	SF	30.00	30.00	100	1985	1985	3	20	240	
5	0445	BOX FNC 5'	0	100	0	0	6.00	LF	8.10	8.10	100	1985	1985	3	20	10	
6	0446	BOX FNC 6'	0	100	0	0	48.00	LF	20.00	20.00	100	1985	1985	3	20	192	
7	0445	BOX FNC 5'	0	100	0	0	16.00	LF	8.10	8.10	100	1985	1985	3	20	26	
8	0445	BOX FNC 5'	0	100	0	0	16.00	LF	8.10	8.10	100	1985	1985	3	20	26	
9	0444	BOX FNC 4'	0	100	0	0	14.00	LF	6.50	6.50	100	1985	1985	3	20	18	
10	0444	BOX FNC 4'	0	100	0	0	14.00	LF	6.50	6.50	100	1985	1985	3	20	18	

TOTAL OB/XF 3,032

LAND DESCRIPTION

LN	USE CODE	CLS	LAND USE DESCRIPTION	CAP	RD	LOC ZONE	FRONT	DEPTH	TOT LND UTS	UNIT TYPE	DT	DPTH FACT	% COND	TOT ADJ	UNIT PRICE	ADJ UNIT PRICE	LAND VALUE	OTHER ADJUSTMENTS AND NOTES	YEAR	DENSITY	DECL	FRZ	YR	CONSRV
1	000100	C	RES	100		RG-2	0.00	0.00	1.00	LT		1.00	1.00	1.00	500,000.00	500,000.00	500,000							

REVIEW DATE 05/12/2019 BY KBA Total Acres: 0.00 Total Land Value: 500,000 Market: 0 Agricultural: 0 Common: 500,000 PRINTED 07/30/2025 BY SYS

LOT 53
BEACH WALKER VILLAGE PB 4/14

SCHAEFER HADLEY P & MARY ELLEN L/E/
12 GREEN WINGED TEAL ROAD
FERNANDINA BEACH, FL 32034

2025

01-6N-29-0200-0053-0000

BUILDING CHARACTERISTICS

ELEMENT	CD	CONSTRUCTION

DOR CODE	0100	SINGLE FAMILY	
MAP NUM		MKT AREA	10
NEIGHBORHOOD/LOC	10001.00		

AREA TYPE	TOTAL GROSS AREA	PCT OF BASE	YEAR	TOT ADJ AREA	SUBAREA MARKET VALUE
TOTALS					

MARKET ADJUSTMENTS

TYPE	MDL	EFF. AREA	TOT ADJ PTS	EFF. BASE RATE	REPL. COST NEW	AYB	EYB	ECON	FNCT		NORM	% COND

BLD DATE		LGL DATE	
XF DATE		LAND DATE	03/14/2024 MLU
INC DATE		AG DATE	

NASSAU COUNTY PROPERTY

PAGE 2 of 2 5

VALUATION SUMMARY

VALUATION BY		STANDARD
Tax Group: 5	Tax Dist:	
BUILDING MARKET VALUE		244,871
TOTAL MARKET OB/XF VALUE		4,584
TOTAL LAND VALUE - MARKET		500,000
TOTAL MARKET VALUE		749,455
SOH/AGL Deduction		396,368
ASSESSED VALUE		353,087
TOTAL EXEMPTION VALUE	HX HB	50,722
BASE TAXABLE VALUE		302,365
TOTAL JUST VALUE		749,455
NCON VALUE		0
INCOME VALUE		
PREVIOUS YEAR MKT VALUE		738,812

PERMIT NUM	DESCRIPTION	AMT	ISSUED

SALES DATA

OFF RECORD Number	DATE	TYPE INST	Q / U	V / I	RSN CD	SALE PRICE
2744/684	10/18/2024	WD	U	I	11	100
GRANTOR: SCHAEFER HADLEY P & M						
GRANTEE: SCHAEFER SCOTT						
0876/1534	3/31/1999	WD	Q	I		210,000
GRANTOR: WRIGHT GERALD R & CAR						
GRANTEE: SCHAEFER HADLEY P &						

BUILDING NOTES

BUILDING DIMENSIONS

EXTRA FEATURES

LN	OB/XF CODE	DESCRIPTION	BLD	CAP	L	W	UNITS	UT	Adj R	ADJ UNIT PRICE	ORIG COND	YEAR ON	YEAR ACTUAL	Q	% COND	OB/XF MKT VALUE	NOTES
11	0855	CONC PAVER	0	100	0	0	187.00	SF	10.00	10.00	100	2004	2004	3	83	1,552	

TOTAL OB/XF 1,552

LAND DESCRIPTION

LN	USE CODE	CLS	LAND USE DESCRIPTION	CAP	RD	LOC ZONE	FRONT	DEPTH	TOT LND UTS	UNIT TYPE	DT	DPTH FACT	% COND	TOT ADJ	UNIT PRICE	ADJ UNIT PRICE	LAND VALUE	OTHER ADJUSTMENTS AND NOTES	YEAR	DENSITY	DECL	FRZ	YR	CONSRV

REVIEW DATE 05/12/2019 BY KBA Total Acres: 0.00 Total Land Value: 500,000 Market: 0 Agricultural: 0 Common: 500,000 PRINTED 07/30/2025 BY SYS