LOT 39
BEACH WALKER VILLAGE PB 4/14

BARRINEAU DENNIS M & TARA B
8 DUCK WOOD RD
FERNANDINA BEACH, FL 32034

2025

01-6N-29-0200-0039-0000

BUILDING CHARACTERISTICS

ELEMENT	CD	CONSTRUCTION
Exterior Wall	10	ABOVE AVG 100
Roof Structur	04	WOOD TRUSS 100
Roof Cover	03	COMP SHNGL 100
Interior Wall	05	DRYWALL 100
Interior Floo	13	LVT/LAMNT 80
Interior Floo	14	CARPET 20
Air Condition	03	CENTRAL 100
Heating Type	04	AIR DUCTED 100
Bedrooms		4 100
Bathrooms		3.5 100
Frame	02	WOOD FRAME 100
Stories	1.	1. 100
Units		0 100
Quality	06	Quality Level 06
DOR CODE	0100	SINGLE FAMILY
MAP NUM		MKT AREA 10
NEIGHBORHOOD/LOC	10001.00	

AREA TYPE	TOTAL GROSS AREA	PCT OF BASE	YEAR	TOT ADJ AREA	SUBAREA MARKET VALUE
BAS	1,763	100	2019	1,763	796,268
DCK	50	10	2019	5	2,259
DCK	382	10	2019	38	17,163
FGR	709	55	2019	390	176,146
FOP	36	30	2019	11	4,968
FUS	643	100	2019	643	290,414
TOTALS	3,583			2,850	1,287,216

MARKET ADJUSTMENTS

TYPE	MDL	EFF. AREA	TOT ADJ PTS	EFF. BASE RATE	REPL. COST NEW	AYB	EYB	ECON	FNCT	PD	NORM	% COND
0500	12	2,850	221.5968	350.12	997,842	2019	2019	0	0	129	2.00	129.00

1 SFR CUST – 100% - 2021 Heated Area: 2406 HX Base Yr 2021

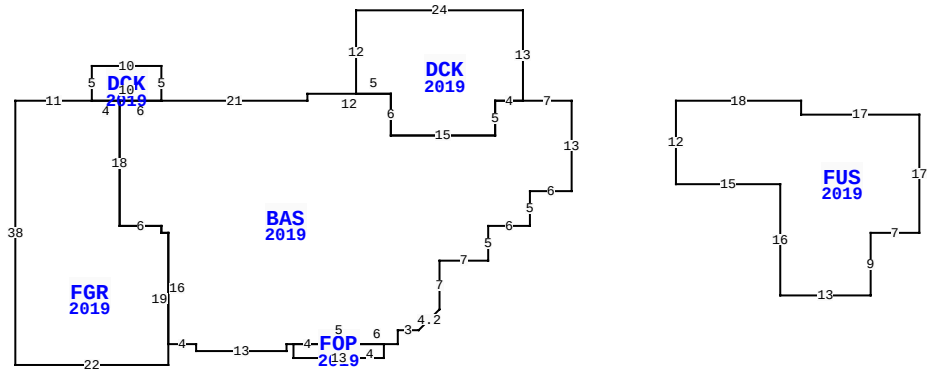

8 WOOD DUCK RD, FERNANDINA BEACH

BLD DATE		LGL DATE	
XF DATE		LAND DATE	03/14/2024 MLU
INC DATE		AG DATE	

NASSAU COUNTY PROPERTY

PAGE 1 of 1 5

VALUATION SUMMARY

VALUATION BY		STANDARD
Tax Group: 5	Tax Dist:	
BUILDING MARKET VALUE		1,287,216
TOTAL MARKET OB/XF VALUE		9,739
TOTAL LAND VALUE - MARKET		500,000
TOTAL MARKET VALUE		1,796,955
SOH/AGL Deduction		660,093
ASSESSED VALUE		1,136,862
TOTAL EXEMPTION VALUE	HX HB	50,722
BASE TAXABLE VALUE		1,086,140
TOTAL JUST VALUE		1,796,955
NCON VALUE		0
INCOME VALUE		
PREVIOUS YEAR MKT VALUE		1,731,908

PERMIT NUM	DESCRIPTION	AMT	ISSUED
19008477	CO ISSUED	0	08/08/2019
B1812497	NEW CONSTR	560,000	12/27/2018

SALES DATA

OFF RECORD Number	DATE	TYPE INST	Q U	V I	RSN CD	SALE PRICE
2412/1251	12/01/2020	WD	Q	I	01	1,260,000
GRANTOR: DICKINSON MICHAEL B &						
GRANTEE: BARRINEAU DENNIS M						
2225/0326	9/20/2018	WD	Q	V	01	240,000
GRANTOR: STEARNS FRANKLYN C &						
GRANTEE: DICKINSON MICHAEL B						

BUILDING NOTES

BUILDING DIMENSIONS

BAS=[YR=2019] W7 DCK=[YR=2019] N13 W24 S12 E5 S6 E15 N5 E4$ W4 S5 W15 N6 W12 S1 W21 DCK=[YR=2019] N5 W10 S5 FGR=[YR=2019] W11 S38 E22 N19 W1N1 W6 N18 W4$ E10$ W6 S18 E6 S1 E1 S16 E4 S1 E13 N1 E1 FOP=[YR=2019] S2 E13 N2 W4 N2 W5 S2 W4$ E4 N2 E5 S2 E6 N2 E3 U3 R3 N7 E7 N5 E6 N5 E6 N13$ PTR= E15 FUS=[YR=2019] E18 S2 E17 S17 W7 S9 W13 N16 W15 N12$ W15$.

EXTRA FEATURES

LN	OB/XF CODE	DESCRIPTION	BLD	CAP	L	W	UNITS	UT	Adj R	ADJ UNIT PRICE	ORIG COND	YEAR ON	YEAR ACTUAL	Q	% COND	OB/XF MKT VALUE	NOTES
1	0855	CONC PAVER	0	100	0	0	956.00	SF	10.00	10.00	100	2019	2019	3	97	9,273	
2	0855	CONC PAVER	0	100	8	6	48.00	SF	10.00	10.00	100	2019	2019	3	97	466	

LAND DESCRIPTION

TOTAL OB/XF 9,739

LN	USE CODE	CLS	LAND USE DESCRIPTION	CAP	RD	LOC ZONE	FRONT	DEPTH	TOT LND UTS	UNIT TYPE	DT	DPTH FACT	% COND	TOT ADJ	UNIT PRICE	ADJ UNIT PRICE	LAND VALUE	OTHER ADJUSTMENTS AND NOTES	YEAR	DENSITY	DECL	FRZ	YR	CONSRV
1	000100	C	RES	100		RG-2	0.00	0.00	1.00	LT		1.00	1.00	1.00	500,000.00	500,000.00	500,000							

REVIEW DATE 10/03/2019 BY DJ Total Acres: 0.00 Total Land Value: 500,000 Market: 0 Agricultural: 0 Common: 500,000 PRINTED 07/30/2025 BY SYS