LOT 71
IN OR 2052/1123
ESMT PT OR 1449/843

ALFORD JARROD R
3285 DEERE DR
PETOSKEY, MI 49770

2025

01-2N-27-1270-0071-0000

NASSAU COUNTY PROPERTY

BUILDING CHARACTERISTICS

ELEMENT	CD	CONSTRUCTION
Exterior Wall	10	ABOVE AVG 80
Exterior Wall	16	WD FR STUC 20
Roof Structur	03	GABLE/HIP 100
Roof Cover	03	COMP SHNGL 100
Interior Wall	05	DRYWALL 100
Interior Floo	14	CARPET 70
Interior Floo	11	CLAY TILE 30
Air Condition	03	CENTRAL 100
Heating Type	04	AIR DUCTED 100
Bedrooms		3 100
Bathrooms		2 100
Frame	02	WOOD FRAME 100
Stories	1.	1. 100
Units		0 100
Occupancy	00	NONE 100
Quality	06	Quality Level 06

DOR CODE	0100	SINGLE FAMILY	
MAP NUM		MKT AREA	04
NEIGHBORHOOD/LOC	4044.00		

AREA TYPE	TOTAL GROSS AREA	PCT OF BASE	YEAR	TOT ADJ AREA	SUBAREA MARKET VALUE
BAS	1,628	100	2004	1,628	187,261
FEP	234	80	2012	187	21,510
FGR	440	55	2004	242	27,836
FOP	227	30	2004	68	7,821
TOTALS	2,529			2,125	244,428

MARKET ADJUSTMENTS

TYPE	MDL	EFF. AREA	TOT ADJ PTS	EFF. BASE RATE	REPL. COST NEW	AYB	EYB	ECON	FNCT		NORM	% COND
0100	01	2,125	127.2383	127.24	270,385	2004	2004	0	0	0	9.60	90.40

1 SINGLE FAM – 0% - 0 Heated Area: 1628 HX Base Yr

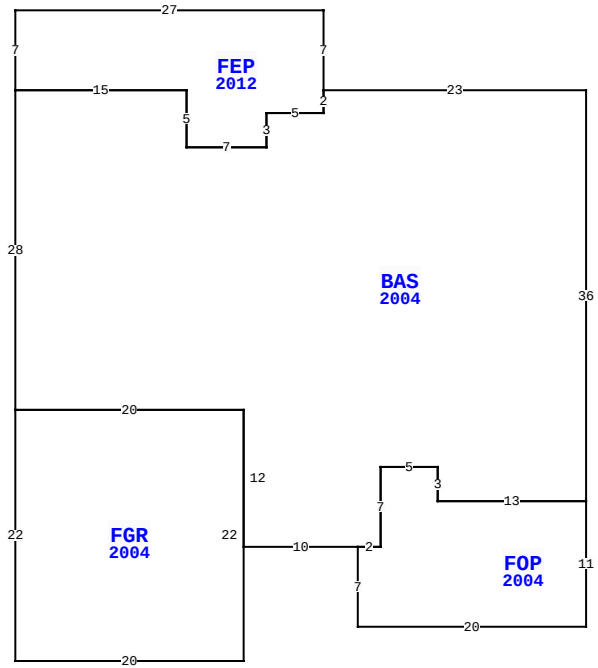

BLD DATE	03/03/2023	NW	LGL DATE
XF DATE			LAND DATE
INC DATE			AG DATE

96013 WATERS CT, FERNANDINA BEACH

VALUATION SUMMARY

VALUATION BY	STANDARD
Tax Group: 4	Tax Dist:
BUILDING MARKET VALUE	244,428
TOTAL MARKET OB/XF VALUE	7,030
TOTAL LAND VALUE - MARKET	65,000
TOTAL MARKET VALUE	316,458
SOH/AGL Deduction	24,984
ASSESSED VALUE	291,474
TOTAL EXEMPTION VALUE	0
BASE TAXABLE VALUE	291,474
TOTAL JUST VALUE	316,458
NCON VALUE	0
INCOME VALUE	
PREVIOUS YEAR MKT VALUE	305,596

PERMIT NUM	DESCRIPTION	AMT	ISSUED
B0412458	NEW CONSTR	175,000	03/01/2004

SALES DATA

OFF RECORD Number	DATE	TYPE INST	Q U	V I	RSN CD	SALE PRICE
2052/1123	6/09/2016	SW	Q	I	02	181,300
GRANTOR: FANNIE MAE						
GRANTEE: ALFORD JARROD R						
2020/0925	12/28/2015	CT	U	I	18	100
GRANTOR: CLERK OF COURT						
GRANTEE: FEDERAL NATIONAL MO						

BUILDING NOTES

BUILDING DIMENSIONS

BAS=[YR=2004] W23 FEP=[YR=2012] N7 W27 S7 E15 S5 E7 N3 E5 N2 $ S2 W5 S3 W7 N5 W15 S28 FGR=[YR=2004] S22 E20 N22 W20 $ E20 S12 E10 FOP=[YR=2004] S7 E20 N11 W13 N3 W5 S7 W2$ E2 N7 E5 S3 E13 N36$.

EXTRA FEATURES

LN	OB/XF CODE	DESCRIPTION	BLD	CAP	L	W	UNITS	UT	Adj R	ADJ UNIT PRICE	ORIG COND	YEAR ON	YEAR ACTUAL	Q	% COND	OB/XF MKT VALUE	NOTES
1	0500	FP-PRE FAB	0	0	0	0	1.00	UT	3,500.00	3,500.00	100	2004	2004	3	87	3,045	
2	0855	CONC PAVER	0	0	0	0	63.00	SF	10.00	10.00	100	2004	2004	3	83	523	
3	0811	CONCRETE B	0	0	0	0	568.00	SF	5.20	5.20	100	2004	2004	3	83	2,451	
4	0858	SCULP CONC	0	0	9	9	81.00	SF	13.00	13.00	100	2006	2006	3	96	1,011	

LAND DESCRIPTION

TOTAL OB/XF 7,030

LN	USE CODE	CLS	LAND USE DESCRIPTION	CAP	RD	LOC ZONE	FRONT	DEPTH	TOT LND UTS	UNIT TYPE	DT	DPTH FACT	% COND	TOT ADJ	UNIT PRICE	ADJ UNIT PRICE	LAND VALUE	OTHER ADJUSTMENTS AND NOTES	YEAR	DENSITY	DECL	FRZ	YR	CONSRV
1	000100	C	RES	0	0003	PUD	0.00	0.00	1.00	LT		1.00	1.00	1.00	65,000.00	65,000.00	65,000							

REVIEW DATE 05/12/2019 BY KBA Total Acres: 0.00 Total Land Value: 65,000 Market: 0 Agricultural: 0 Common: 65,000 PRINTED 07/30/2025 BY SYS